www.lightsky.com.cn

Fly Dragon Lighting Equipment Co., Ltd.

Add : NO.4 JINGNENG ROAD 1, HUADU DISTRICT, GUANGZHOU, CHINA.
Tel : 020-61828288 Fax : 020-61828188 Postal Code : 510820
Email : flydragon@lightsky.com.cn

Social Media

LiGHT SKY Wechat

LiGHT SKY

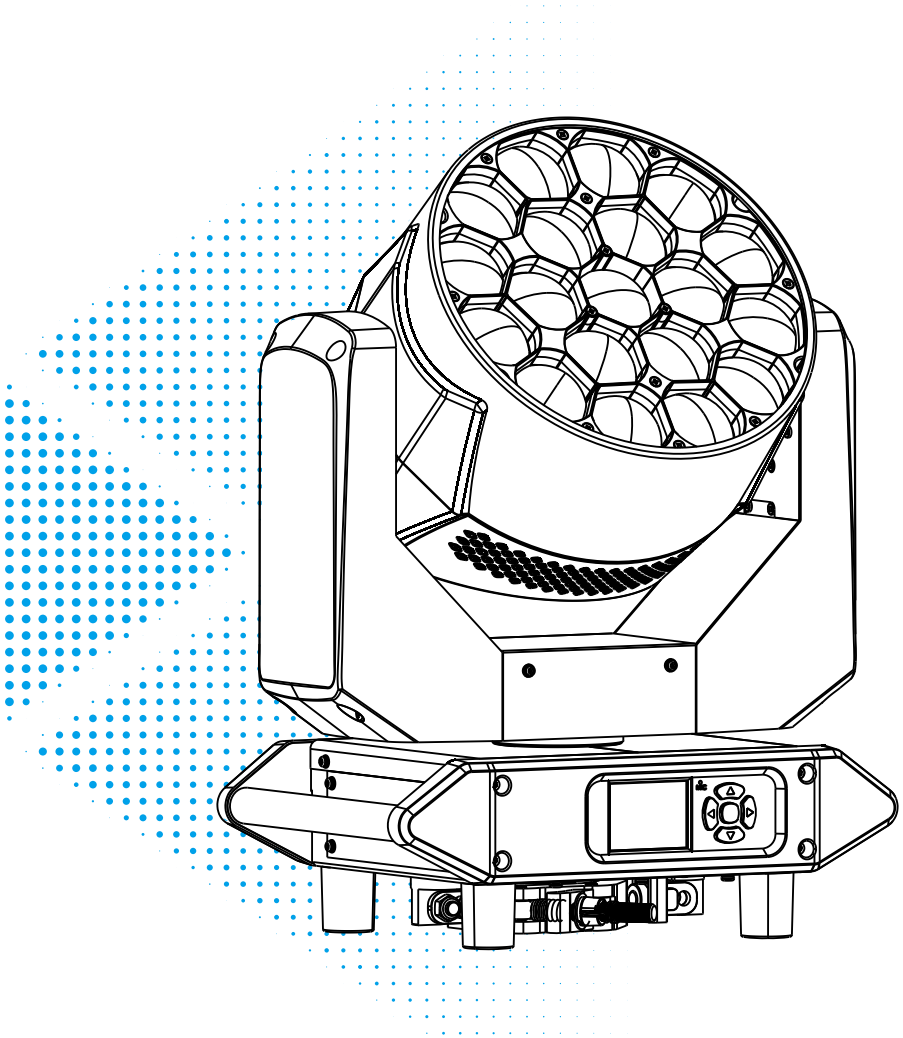

TX1920ZOOM

User Manual

Please read the instruction carefully before use

Contents

1. Safety information.....2
2. Technical information.....4
3. Attachment and body size.....6
4. Installation and connecting.....7
5. Control panel.....10
6. Menu setting.....11
7. Channel function.....13
8. Circuit connecting diagram.....15
9. Cleaning and maintenances.....16
10.Troubeshooting.....17
11.Duty exonerative and copyright protection.....18

Congratulations on choosing our company product! We thank you for your custom.

- ◆Please note that this product, as all the others in the rich my company range, has been designed and made with total quality to ensure excellent performance and best meet your expectations and requirements.
- ◆Carefully read this user manual in its entirety and keep it safe for future reference. It is essential to know the information and comply with the instructions given in this manual to ensure the fitting is installed, used and serviced correctly and safely.
- ◆My company disclaims all liability for damage to the fitting or to other property or persons deriving from installation, use and maintenance that have not been carried out in conformity with this user manual, which must always accompany the fitting.
- ◆My company reserves the right to modify the characteristics stated in this user manual at any time and without prior notice.

SAFETY INFORMATION

Please read the instruction carefully which includes important information about the installation, usage and maintenance.

WARNING

Please keep this User Manual for future consultation. If you sell the unit to another user, be sure that they also receive this manual.

The following symbols are used to identify important safety information on the product and in this manual:

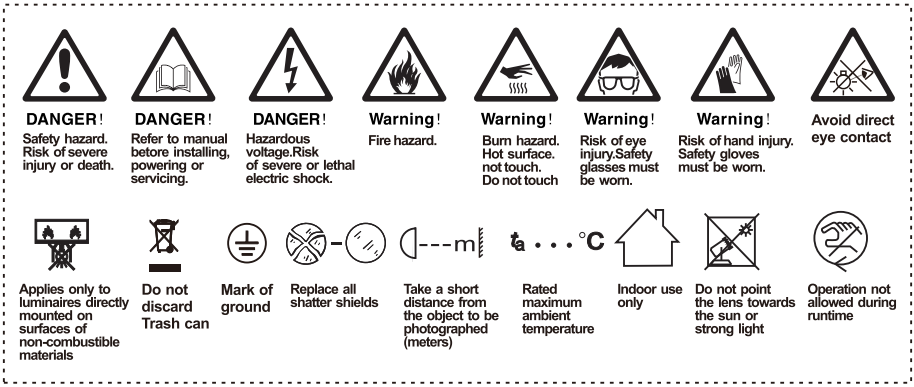

Important:

Damages caused by the disregard of this user manual are not subject to warranty.

The dealer will not accept liability for any resulting defects or problems.

— The equipment is only suitable for indoor dry place use.

— Unpack and check carefully to ensure that there is no transportation damage before using the unit.

— Do install and operate by qualified operator.

— The light source in this luminaire should be replaced by the manufacturer or its service agent or a similarly qualified person, always cut off the power supply before replacing he light source.

— Do not allow children to operate the fixture.

— Use safety chain when fixing the unit. Handle the unit by carrying its base instead of head only.

— The unit must be installed in a location with adequate ventilation, at least 50cm from adjacent surfaces.

— Be sure that no ventilation slots is blocked, otherwise the unit will be overheated.
— Before operation, ensure that you are connecting this product to the proper voltage in accordance with the specifications in this manual or on the product's specification label.
— It's important to ground the yellow/green conductor to earth in order to avoid electric shock.
— Minimum ambient temperature Ta: -10°C. Maximum ambient temperature Ta: 40°C. Do not operate this product at a lower or higher temperature.
— Do not connect the device to any dimmer pack.
— When the lamp is running, do not place combustible objects next to it. The shortest distance between the device and inflammable and explosive objects or materials is 1m.
— Make sure the power cord is not crimped or damaged; replace it immediately if damaged.
— Unit's surface temperature may reach up to 80°C. do not touch the housing bare-handedduring its operation.
— Avoid any flammable liquids, water or metal from entering the unit. Once it happens, cut off the mains power immediately.
— Do not operate in a dirty or dusty environment. do clean the fixture regularly.
— Do not touch any wire during operation as there might be a hazard of electric shock.
— Avoid entanglement of the power cord with other wires.
— The minimum distance to objects/surface must be more than 3 meters.
— In the event of serious operating problem, stop using the unit immediately.
— Never turn on and off the unit time after time.
— The housing, the lenses, or the ultraviolet filter must be replaced if they are visibly damaged.
— Do not open the housing as there are no user serviceable parts inside.
— Do not attempt to operate this unit if it becomes damaged. do not attempt any repairs yourself. Repairs carried out by unskilled people can lead to damage or malfunction. Please contact the nearest authorized technical assistance center if needed.
— Disconnect this product from its power source before servicing.
— Do use the original packaging if the device is to be transported.
— Avoid direct eye exposure to the light source while the product is on.
— Do not operate this product if you see damage on the housing, shields, or cables. Have the damaged parts replaced by an authorized technician at once.

Installation:

The fixture should be fixed on the clamp. always ensure that the unit is firmly fixed to avoid vibration and slipping off during operation. ensure that the trussing or area of installation must be able to hold 10 times the weight without any deformation. Always install a safety cable that can hold at least 12 times the weight of the fixture when installing.do install and operate by qualified operator. It must be installed in a place where there is out of the reach of people.

TECHNICAL INFORMATION

OPTICS

- Light source: 19 × 20W RGBW LED
- Spot angle: 7 °~55 °
- Color temperature: 2500K-10000K
- Visual indication: Ra ≥ 75
- Illuminance: 10208 lux @ 5 m
- Luminous flux: 6396 Lm
- Average lifespan of light source: 30000H

EFFECT

- Color Mixing System: Uniform RGBW Color Mixing System and Rainbow Effect
- Zoom system: linear electric zoom
- Single loop control: The light source supports independent color change control for both inner and outer loops
- Effect macros: static effect macros and dynamic effect macros functions
- Dimming: Electronic dimming, providing four dimming curves+four dimming frequencies+four dimming speeds
- Strobe: 1-30Hz electronic strobe and random strobe

CONTROL AND PROGRAMMING

- Control channels: Standard 15CH, Extended 24CH, Extended 25CH, see channel table for details
- Control protocol: Standard DMX512 protocol, RDM protocol
- Data connection: Three core or five core signal input/output
- Display: LCD screen

SOFTWARE

- Upgrade software through DMX signal interface
- Intelligent temperature control ensures LED lifespan

X/Y AXIS MOTION ANGLE

- X-axis: 540 ° (8-bit/16bit precision scanning)
- Y-axis: 210 ° (8-bit/16bit precision scanning)
- Reset function with automatic error correction
- Fixed lock: Y-axis lock

POWER

- Input voltage: AC 100-240V 50/60Hz
- Maximum power: 403W
- Power factor: 0.98
- Maximum current of the lamp: 1.9A/220V, 4A/110V

DIMENSIONS & WEIGHT

- Product size: 338 × 216 × 422mm
- N.W.: 10.6 kg
- Carton packaging (default): 480 × 400 × 280mm
- G.W.: 12.6 kg
- Flycase Size (4 units): 920 × 580 × 615MM
- G.W.: 78.8kg

OTHER

- Protection level: Ip20
- Working environment: -10 ℃~40 ℃
- Maximum surface temperature of lamp body: 60 ℃

APPROVALS

- The product implementation standard: GB 7000.1-2015 GB7000. 217-2008
- Approved certifications: CE、RoHs
- The product complies with the following EU directives:
- Low Voltage Directive 2014/35/EU . EMC Directive 2014/30/EU

illumination diagram

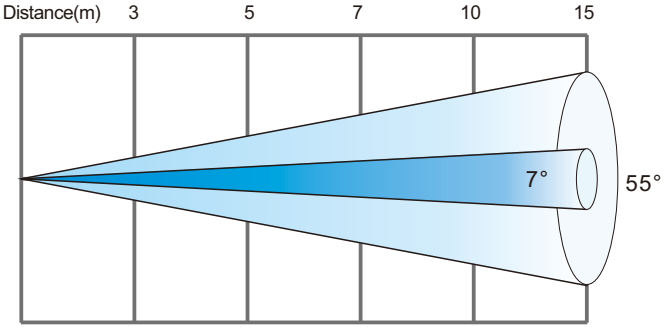

7° Lux R	5000	2140	1090	625	218
G	10700	4360	2220	1230	510
B	1200	500	255	126	60
W	17000	6730	3430	1845	890
RGBW	32500	10208	5208	3110	1516
Diameter(m)	0.37	0.62	0.86	1.23	1.85
55° Lux R	433	165	83	58	20
G	844	315	160	101	44
B	99	41	20	14	5
W	1206	453	231	151	56
RGBW	2050	827	421	256	93
Diameter(m)	3.12	5.21	7.29	10.41	15.61

ATTACHMENT AND BODY SIZE

1



Attachment contents- Fig. 1

2

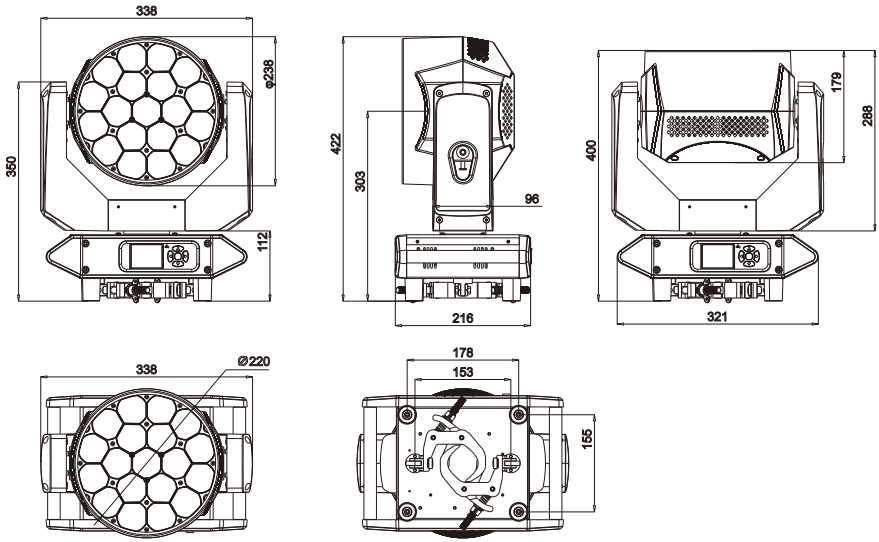

Body Size---Fig 2 (Unit:mm)

INSTALLATION AND CONNECTING

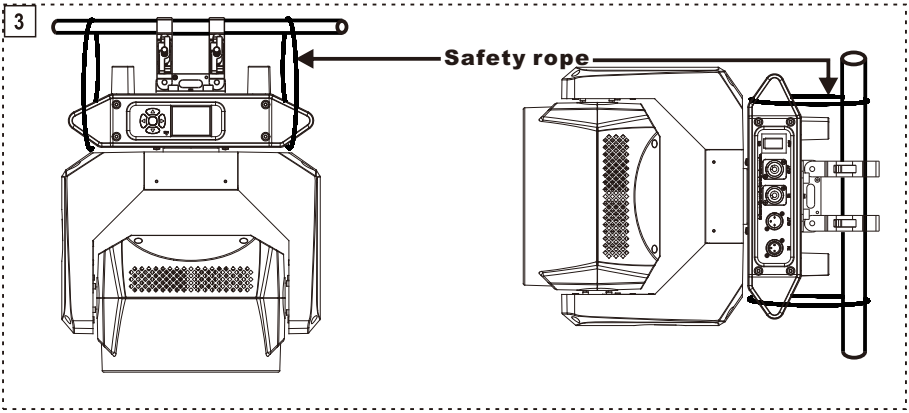

Installing the projector- Fig. 3

Compact,standard clamp system equipped & easy installation

The projector can be installed on the floor resting on special rubber feet, on a truss or on the ceiling or wall. WARNING:with the exception of when the projector is positioned on the floor, the safety rope must be fitted. This must be securely fixed to the support structure of the projector and then connected to the fixing point at the centre of the base.

Make sure all parts for fixing the projector are in a good state of repair.
Make sure the point of anchorage is stable before positioning the projector.
When suspending the fixture, ensure that the supporting structure and all hardware used can hold at least 10 times the weight of all the devices they support.

4

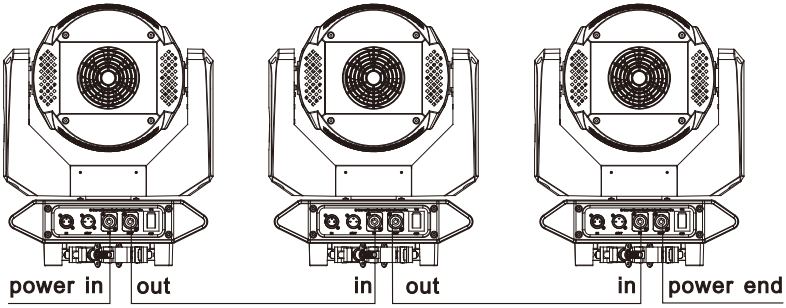

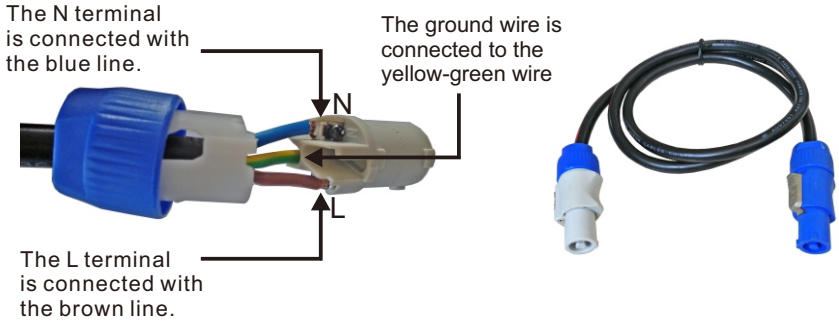

Connecting to the mains suppply ---Fig 4

- The stage lighting power supply can not be more than 2pcs pre line
- connection to the eiectricty mains must be carried out by a qualified electrical installer.
- After doing the above operation and making sure all the devices had been installed with natural operate, press the power switch to check whether every-thing is working normally.

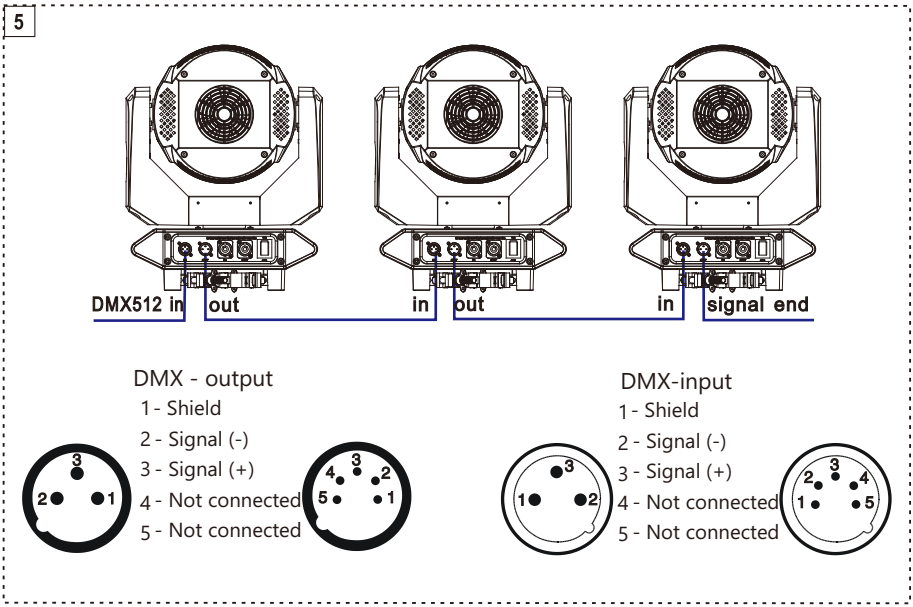

Connecting to the control signal line (DMX) - Fig. 5

◎ Please use the round 3 or 5-pin XLR plugs &sockets offered by menu facture to connect the first projector's output to the second projector' input and connect the second projector's output to the third projector's input. And in the same way for the rest,eventually connect the last projector's output,all the projectors are together.

◎The projectors's control signal output or input by using the 3 or 5-pin XLR pug and socket.If need to lengthen the communication cable,please make sure the both side of 3 or 5-pin plug is one to one . (one to one,two to two,three to three).Otherwise,the communication cable will be interrupted.The communicate cable is 2-cord screened cable 75Ω resistance with each core is at least a 0.5mm diameter.(**Caution:**All the inside leading wire of 3 or 5-pin XLR plug couldn't touch each other or plinth).

◎Recommend to use the DMX signal terminator for the installation to avoid the electronic noise dama -ge the digital control signal.Simply speaking,DMX terminator is an XLR connector with a 120Ω 1/2W resistor connected across pin 2 and 3.Which is then plugged into the output socket on the last projec -tor in the chain.Refer to the connection.

CONTROL PANEL

6

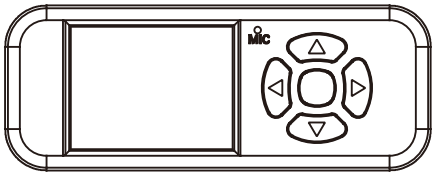

Up arrowhead : page up
Down arrowhead : page down
Left arrowhead : reduce
Right arrowhead : increase
Enter : OK function
Exit : in the choice screen

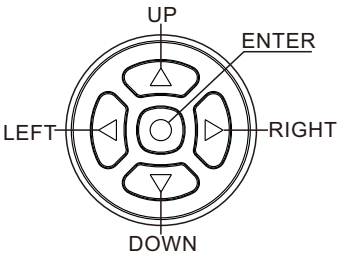

● **Press the switch. The projector starts resetting the effects. At the same time, the following information scrolls on the display(please refer to the actual material):**



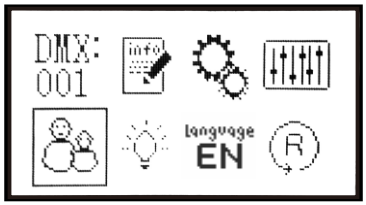

DMX: 001 DMX Address | Information | Personal | Manual control

Service | Lamp | Language EN | Reversal

- Color Calibration System

Because LED chip's brightness and wave length can not be produced exactly same by LED factory, which would cause the color difference in the LED color fixture. To solve the issue , LIGHT SKY adopts a calibration system by calibrating each color's brightness curve and defining a standard color area . then apply this standard into all the LED fixture to lower the color difference .

So, in MENU Optional of Open Calibration OFF/ON in PERSONAL is available.Standard production , the Calibration system in ON. But user can choose OFF as well

MENU SETTING

Main menu	I menu	II menu	III menu	Note
DMX setting	Address	001 - 512		
	Channel mode	Extended(25)		
		Standard(15)		
		Extended2(24)		
	State	Blackout		
		Hold		
		Auto		
Info	Fixture times	Power on time	0 - 99999H	
		LED on time	0 - 99999H	
		All time	0 - 99999H	
	Fan speed	LED fan	0 - XXXXX	
		Power fan	0 - XXXXX	
	Fan voltage	LED fan	0 - XX.XV	
		Power fan	0 - XX.XV	
	Temperatures	LED TEMP	(-40℃ - 125℃)	
	RDM info	0x3888XXXXXXXX		
	DMX live	1.Pan	0 - 255	
		2.Pan fine	0 - 255	
		3.Tilt	0 - 255	
		4.Tilt fine	0 - 255	
		5.P/T Speed	0 - 255	
		6.Function	0 - 255	
		7.Dimmer	0 - 255	
		8.Dimmer fine	0 - 255	
		9.Strobe	0 - 255	
		10.Red 1	0 - 255	
		11.Green 1	0 - 255	
		12.Blue 1	0 - 255	
		13.White 1	0 - 255	
		14.Red 2	0 - 255	
		15.Green 2	0 - 255	
		16.Blue 2	0 - 255	
		17.White 2	0 - 255	
		18.Red 3	0 - 255	
		19.Green 3	0 - 255	
		20.Blue 3	0 - 255	
		21.White 3	0 - 255	
		22.Color Macro	0 - 255	
		23.Effect Macro	0 - 255	
		24.Zoom	0 - 255	
		25.CCT	0 - 255	
	Version	Display	VX.XXX	
		Pan/Tilt	VX.XXX	
		LEDDRV	VX.XXX	
Person	Pan/Tilt	PT swap	OFF	
			ON	
		Pan invert	OFF	
			ON	
		Tilt invert	OFF	
			ON	
	Led Hz	3000Hz		
		6000Hz		
		12000Hz		
		24000Hz		
	Dimmer Curve	Linear		
		Square		
		I-Square		
		Scurve		
	Dimmer Speed	Fade		
		Snap		
	Fan mode	Silent mode		
		Standard mode		
		Hot mode		
	Display	Language	English	
			Chinese	
		Backlight time	Always	
			Auto (30S)	
		Intensity	0 - 100	
		Rotation	Normal	
			Rotate	

Main menu	I menu	II menu	III menu	Note
	Master/Slave	Master		
		Slave		
Manual	Manual Control	1.Pan / 1.水平	0 - 255	
		2.Pan fine	0 - 255	
		3.Tilt	0 - 255	
		4.Tilt fine	0 - 255	
		5.P/T Speed	0 - 255	
		6.Function	0 - 255	
		7.Dimmer	0 - 255	
		8.Dimmer fine	0 - 255	
		9.Strobe	0 - 255	
		10.Red 1	0 - 255	
		11.Green 1	0 - 255	
		12.Blue 1	0 - 255	
		13.White 1	0 - 255	
		14.Red 2	0 - 255	
		15.Green 2	0 - 255	
		16.Blue 2	0 - 255	
		17.White 2	0 - 255	
		18.Red 3	0 - 255	
		19.Green 3	0 - 255	
		20.Blue 3	0 - 255	
		21.White 3	0 - 255	
		22.Color Macro	0 - 255	
		23.Effect Macro	0 - 255	
		24.Zoom	0 - 255	
		25.CCT	0 - 255	
	Reset	Pan/Tilt reset		
		Zoom reset		
		Total reset		
Test	Test all	During testing		
	Test pan/tilt	During testing		
	Test effects	During testing		
Service	Fixture state	Memory IC	OK/Reset/Error	
		Pan Encodeer	OK/Reset/Error	
		Pan Drive IC	OK/Reset/Error	
		Tilt Encoder	OK/Reset/Error	
		Tilt Drive IC	OK/Reset/Error	
		Pan	OK/Reset/Error	
		Tilt	OK/Reset/Error	
		Zoom	OK/Reset/Error	
	Adjust	Pan	0 - 255	
		Tilt	0 - 255	
		Zoom	0 - 255	
	White Balance	Red 1	125 - 255	
		Green 1	125 - 255	
		Blue 1	125 - 255	
		White 1	125 - 255	
		Red 2	125 - 255	
		Green 2	125 - 255	
		Blue 2	125 - 255	
		White 2	125 - 255	
		Red 3	125 - 255	
		Green 3	125 - 255	
		Blue 3	125 - 255	
		White 3	125 - 255	
	Factory	Factory Reset		
		Reset timers	Reset power on timers	
			Reset led timers	
			Reset all timers	
		Developer		
		LED output power	50 - 100	

CHANNEL FUNCTION

15 Channel	25 Channel	24 Channel	DMX	Function	Note
1	1	1	0 - 255	**Pan**	
2	2	2	0 - 255	**Pan fine**	
3	3	3	0 - 255	**Tilt**	
4	4	4	0 - 255	**Tilt fine**	
5	5	5	0 - 255	**P/T Speed**	
6	6	6		**Function**	
			0 - 10	Reserved	
			11 -- 20	Total reset	
			21 -- 30	Pan/Tilt reset	
			31 -- 40	Zoom reset	
			41 -- 50	Silent mode	
			51 -- 60	Standard mode	
			61 -- 70	Hot mode	
			71 -- 80	No function	
			81 -- 90	No function	
			91 -- 100	No function	
			101 -- 110	No function	
			111 -- 120	No function	
			121 -- 130	Backlight time Always	
			131 -- 140	Backlight time Auto	
			141 -- 150	Linear	
			151 -- 160	Square	
			161 -- 170	I-Square	
			171 -- 180	Scurve	
			181 -- 190	Led Hz 3000HZ	
			191 -- 200	Led Hz 6000HZ	
			201 -- 210	Led Hz 12000HZ	
			211 -- 220	Led Hz 24000HZ	
			221 -- 230	Dimmer Speed Fade	
			231 -- 240	Dimmer Speed Snap	
			241 -- 255	Reserved	
7	7	7	0 - 255	**Dimmer**	
8	8	8	0 - 255	**Dimmer fine**	
9	9	9		**Strobe**	
			0 - 9	Reserved	
			10 - 199	Strobe-effect from slow to fast	
			200 - 249	Random strobe-effect from slow to fast	
			250 - 255	Reserved	
10	/	/	0 - 255	**Red**	
11	/	/	0 - 255	**Green**	
12	/	/	0 - 255	**Blue**	
13	/	/	0 - 255	**White**	
14	/	/		**Color Macro**	
			0 - 3	Reserved	
			4 - 255	Color Macro	
15	/	/	0 - 255	**Zoom**	
/	10	10	0 - 255	**Red 1**	
/	11	11	0 - 255	**Green 1**	
/	12	12	0 - 255	**Blue 1**	
/	13	13	0 - 255	**White 1**	
/	14	14	0 - 255	**Red 2**	
/	15	15	0 - 255	**Green 2**	
/	16	16	0 - 255	**Blue 2**	
/	17	17	0 - 255	**White 2**	
/	18	18	0 - 255	**Red 3**	
/	19	19	0 - 255	**Green 3**	

15 Channel	25 Channel	24 Channel	DMX	Function	Note
/	20	20	0 - 255	**Blue 3**	
/	21	21	0 - 255	**White 3**	
/	22	22		**Color Macro**	
			0 - 3	Reserved	
			4 - 255	Color Macro	
/	23	23		**Effect Macro**	
			0 - 3	Reserved	
			4 - 32	Effect 1	
			33 - 62	Effect 2	
			63 - 92	Effect 3	
			93 - 122	Effect 4	
			123 - 152	Effect 5	
			153 - 182	Effect 6	
			183 - 212	Effect 7	
			213 - 242	Effect 8	
			243 - 255	Effect 9	
/	24	24	0 - 255	**Zoom**	
/	25	/	0 - 5	**NO Effect**	
			6 - 18	2500K - 2700K	
			19 - 31	2700K - 3000K	
			32 - 44	3000K - 3200K	
			45 - 57	3200K - 3500K	
			58 - 70	3500K - 3700K	
			71 - 83	3700K - 4000K	
			84 - 96	4000K - 4500K	
			97 - 109	4500K - 5000K	
			110 - 122	5000K - 5600K	
			123 - 135	5600K - 6000K	
			136 - 148	6000K - 6500K	
			149 - 161	6500K - 7000K	
			162 - 174	7000K - 7500K	
			175 - 187	7500K - 8000K	
			188 - 200	8000K - 8500K	
			201 - 213	8500K - 9000K	
			214 - 226	9000K - 9500K	
			227 - 254	9500K - 10000K	
			255	10000K	

CIRCUIT CONNECTING DIAGRAM

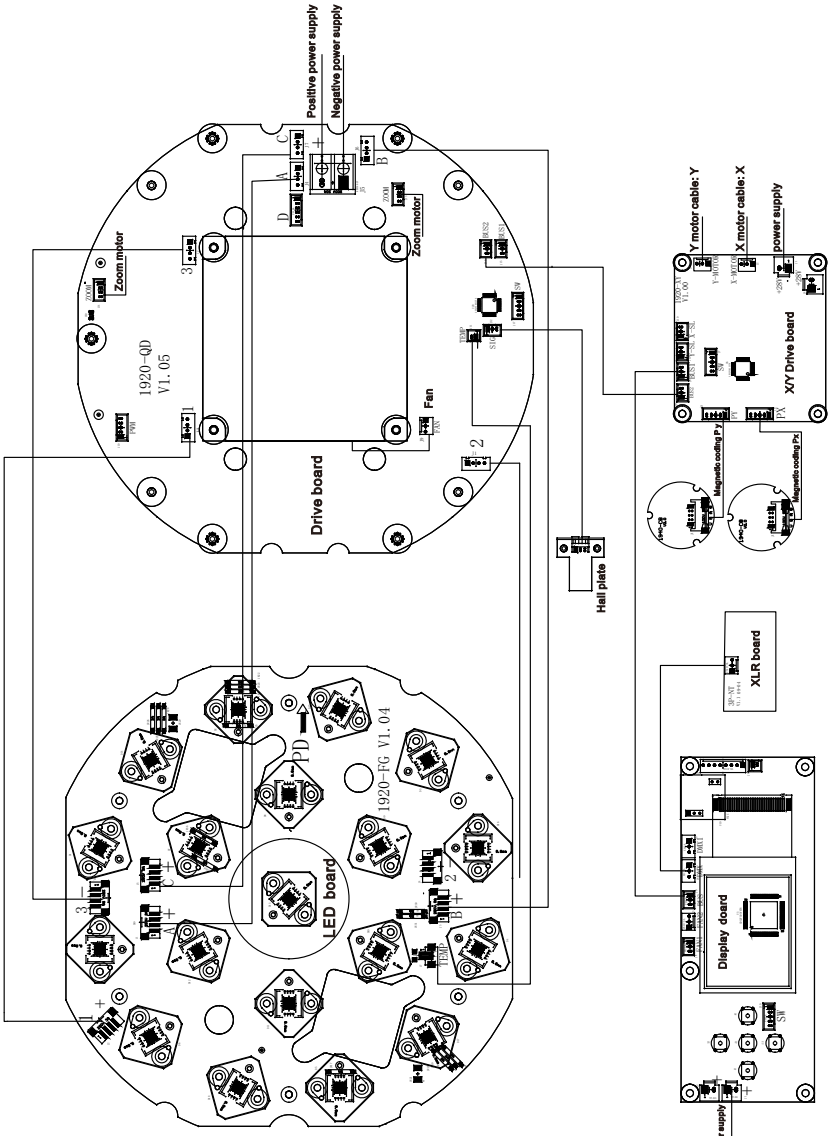

CLEANING AND MAINTENANCES

■1.In order to ensure the projector could work normally. It should be kept clean always . The lens should also be regularly cleaned to maintain an optimum light output. Do not use any type of solvent on lens. It will damage the projector.

■2.Suggestion: The continue usage of the light don't exceed 4 hours. Or it will shorter the usage of the lamp. Please use the alternative operation to solve this problem. The fixture power ON time is best not over 48 hours, or it would generate lamp protection procedure.

■3.Please disconnect the power supply when begin to maintenance take down the light. Please let the parts cool down 10 minute at least then begin to install.

■4.Please inspect the lens or other moving parts timing and keep them clear and static. If find anything damaged or looseness must change a lamp or fix the lamp in order to avoid the accident. Please check the machenical parts is jamging.After cleaning,please add some temperature -durable juice.

■5.The light use the strong cool system.It iseasy for the dirty to be colletced.Please do clear the hot-sak one time two week at least.

■6. After you use the light,please check the intake place whether there are some wastepaper, please clean it up,or the windmill will break down and causing fire.

CAUTION!
Disconnect from mains before starting maintenance operation.

TROUBESHOOTING

It is recommended some solution for some normal trouble shooting. Any inextricability problems should always be handling by the professional person. Disconnect the power supply before maintenance the light.

■ **LED off / LED**:

1.Please check if install the suitable voltage.
2.Please check whether the led will reach the end of their life can explode; please replace a same description led.
3.Please check if the power supply is enough.
4.Please check whether the DMX 512 controller pass the "turn on" order.

■**The light couldn't accept the control order:**

1.Please check the start code address and the function option are correct.
2.Please check whether the communicate control cable is on good connection or the cable is too long or interrupt.
3.Please check the control system is not valid, check the signal amplifier of chain connected is valid.
4.Please check whether the communicate cable is too long or the other equipment is mutually conjugate.
5.Please arrange the wire well, shorter the signal cable, put the high voltage cable and low voltage cable separately.
6.Add the signal amplify isolator.
7.Signal cable is used the excellent screening doublet (Resistance 75 OHM) .
8.The end of the light end and the end resistance.

■**The light can't move:**

1.Please check if the power supply is suitable for the light voltage data.
2.Please check the light if they are deformation, inside parts is broken, become wet etc will lead the loose contact.
3.Please check the if the iniside lead wire and the connector is loose.
4.Please check the electric parts(such as the transformer,PCB board,contrller) is short-circuit or burn down.

■

On working,the pan &tilt couldn't work normally:

1. Please check according to the above step by step.
2. Please check the belt of the X.Y is broken.
3. Please check the X/Y direction data to the receiver is damage.
4. Re-projector reset.

DUTY EXONERATIVE AND COPYRIGHT PROTECTION

* Light source belongs to consumption products, not within the scope of warranty.
* The manufacturer shall not bear any responsibility for any damage caused byfailure tooperate in accordance with this instruction.
* All the information in this manual shall be interpreted by the manufacturer.
* All the information in this manual shall not be copied without permission.
* The data contained in this statement are subject to change in thefuture without prior notice.