LiGHT SKY



TX1920 ZOOM

LED MOVING WASH

FEATURES

- Light source: 19×20W RGBW LED, stable performance, long lifespan.
- Integrated combination optical lens design, high brightness, long throw distance, multifunctional, widely applicable.
- Optical zoom range of 7-55°, providing broad zoom capability.
- Compact size and lightweight fixture, easy to install and use.

Unit: mm

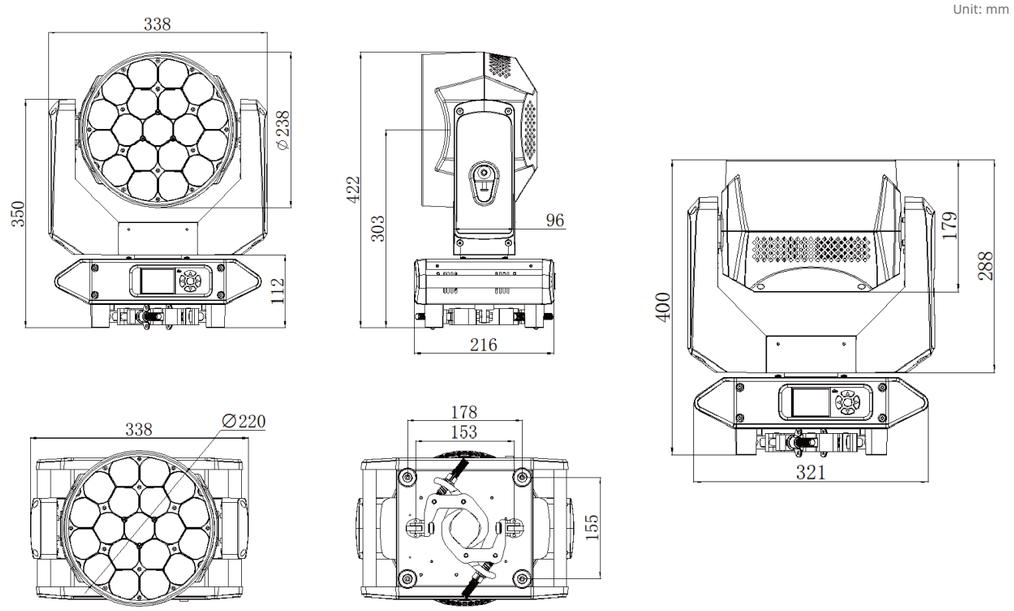

Optics

- Light Source: 19×20W RGBW LED
- Zoom Range: 7° - 55°
- Colour Temperature Output: 2500K - 10000K
- Color Rendering Index (CRI): Ra≥75
- Illuminance : 10,208 lx @ 5m
- Lumen Output: 6396 lm
- Light Source Theory Life Span: 30,000 h

Effects

- Color Mixing System: Uniform RGBW color mixing system and rainbow effect
- Zoom System: Linear electronic zoom
- Front Ring: The front luminous circle can be controlled individually to create dynamic color changing effects
- Effect Macros: Includes static and dynamic effect macro functions
- Dimming: Electronic dimming with four dimming curves, four dimming frequencies, and four dimming speeds
- Strobe: 1-30Hz electronic strobe and random strobe effects

Control and Programming

- Control channels: 15CH, 24CH, 25CH (see channel chart for details)
- Protocols: DMX512, RDM
- DMX and RDM connectors: 3 pin or 5 pin XLR IN/OUT
- Display: LCD screen

Software

- Software Upgrade: DMX signal interface
- Temperature Intelligent Control: Ensures LED lifespan through temperature intelligent control

Pan/Tilt Movement

- Pan: 540°, 8-bit / 16-bit precision
- Tilt: 210° , 8-bit / 16-bit precision
- Automatic reset with error correction
- Tilt Lock

Power and Electrical

- Input Voltage Range: AC 100-240V 50/60Hz
- Max Power Consumption: 403W
- Power Factor: 0.98
- Maximum Current of Fixture: 1.9A/220V; 4.0A/110V

Size and Weight

- Product Dimensions: 338mm × 216mm × 422mm
- Net Weight: 10.6 kg
- Carton Dimensions: 480mm × 400mm × 280mm
- Gross Weight: 12.6 kg

Other

- IP Rate: IP20
- Operating Environment: -10°C ~ 40°C
- Maximum Surface Temperature of Fixture: 60°C

Factory Configuration

- Power Cable: 1 pc (Part No.: F0200030002)
- Signal Cable: 1 pc (Part No.: C1400060031)
- Safety Rope: 2 pcs (Part No.: F0200010008)
- Clamp: 1 set (Part No.: C0499990019)

Optional Accessories/Packaging

- Flycase Part No.: B0100320001
- Flycase Dimensions(4 in 1): 920mm × 580mm × 615mm
- Flycase Gross Weight(4 in 1): 78.8 kg

Illumination Diagram

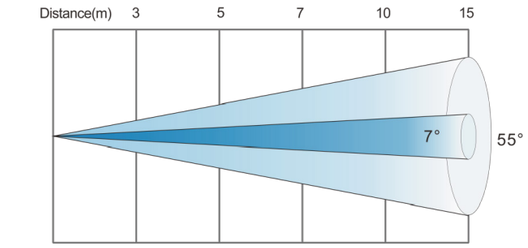

7° Lux R	5000	2140	1090	625	218
G	10700	4360	2220	1230	510
B	1200	500	255	126	60
W	17000	6730	3430	1845	890
RGBW	32500	10208	5208	3110	1516
Diameter (m)	0.37	0.62	0.86	1.23	1.85
55° Lux R	433	165	83	58	20
G	844	315	160	101	44
B	99	41	20	14	5
W	1206	453	231	151	56
RGBW	2050	827	421	256	93
Diameter (m)	3.12	5.21	7.29	10.41	15.61

