LiGHT SKY



NEW

SEAL

Outdoor LED BLINDER

IP66 · RDM · DMX 512 · Art-net · sACN · CRI Ra ≥ 90 · RoHS

FEATURES

- High-brightness waterproof audience light with ±25° manual tilt adjustment
- Warm white/red/amber LED chipset for pure color rendering and nuanced tungsten-like effects
- High color rendering index (CRI) for authentic stage color reproduction
- Patented quick-splice mechanism enabling vertical/horizontal rapid assembly
- Optimized for outdoor concerts, TV shows, photo zones, and large-scale events
- Compact weather-resistant housing with IP66 protection rating

Unit: mm

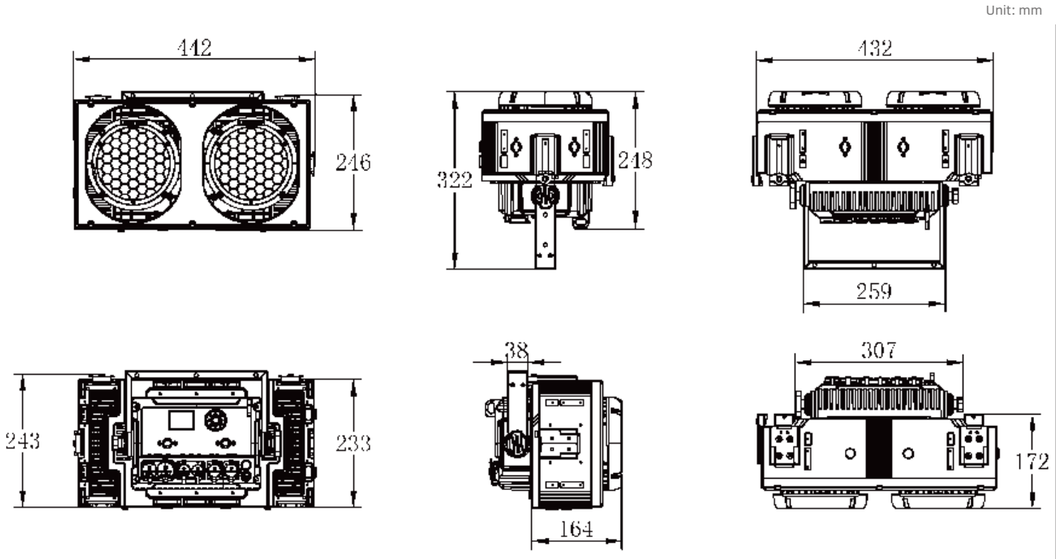

Light source and Optics

- Light source: 2 x 230W WRA COB (Warm White, Red, Amber)
- Beam Angle: 50°
- Field Angle: 84.6°
- Color Rendering Index: Ra≥93.5
- Colour Temperature Output: 2653K±250K
- Lumen Output: 21747 lm
- Illuminance: 1160 lx @ 5m
- Light Source Theory Life Span:≥ 20,000 h

Effects

- Dimming: Electronic dimming with four dimming curves
- Dimming Effect: Simulates traditional tungsten lamp response
- Strobe: 1-30Hz electronic strobe and random strobe

Control and Programming

- Control Channels: Standard modes 1CH/2CH/8CH/14CH(see channel chart for details)
- Control Protocols: DMX512, RDM, Art-Net ,sACN
- Data Connection: 3 pin or 5 pin XLR IN/OUT, RJ45(Art-Net) In/Out
- Display: LCD screen

Software

- Software upgrade: via DMX interface
- Temperature control: Intelligent system for LED lifespan

Power and Electrical

- Input Voltage Range: AC 100-240V 50/60Hz
- Max Power Consumption: 464W
- Power Factor: 0.99
- Maximum Current:4.7A/100V 2.1A/220V

Size and Weight

- Product Dimensions: 438mm x 248mm x 242mm
- Net Weight: 11.3 kg
- Carton Dimensions: 510mm × 320mm × 380mm
- Gross Weight: 14.1 kg

Other

- Protection Level: IP66
- Operating Environment: -20℃~45℃
- Maximum Surface Temperature: 65℃
- Locking System: LiGHT SKY Mortise Locking System

Factory Configuration

- Power Cable: 1 pc (Part No.: F0200030016)
- Signal Cable: 1 pc (Part No.: F0200020008)
- Safety Rope: 1 pc (Part No.: F0200010002)

Optional Accessories/Packaging

- Clamp(LiGHT SKY): Part No.: C0499990075 (Compatible with tubes of Ø40-60 mm)
- Clamp(Neutral): Part No.: C0499990021 (Compatible with tubes of Ø40-60 mm)
- Flycase Dimensions(4 in 1): 960mm x 700mm x 465mm
- Flycase Gross Weight(4 in 1): 79kg

Illumination Diagram

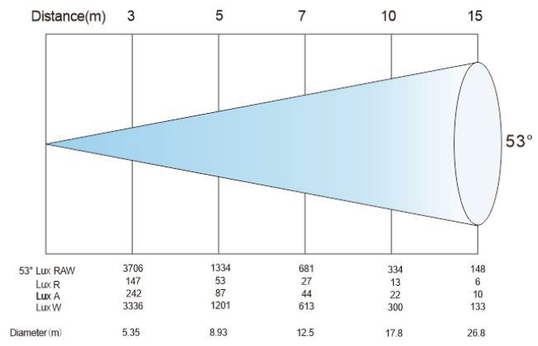

Modularised Effects Series



