LiGHT SKY

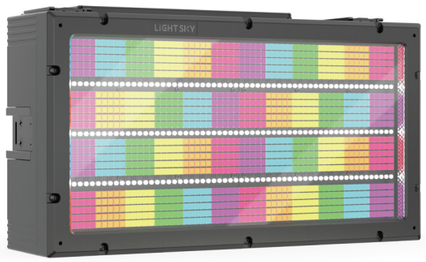

NEW

SEAGUL

OUTDOOR LED STROBE LIGHT

FEATURES

- Multi-functional waterproof strobe light integrating strobe and wash effects
- Seamless switching between intense strobe gobos and soft wash lighting
- 1,200 x 0.5W RGB high-brightness LEDs with 40-zone independent control
- 180 x 5W white LEDs with 30-zone dynamic adjustment
- Modular design supporting vertical/horizontal rapid splicing
- Optimized for concerts, festivals, outdoor stages, and TV productions

Unit: mm

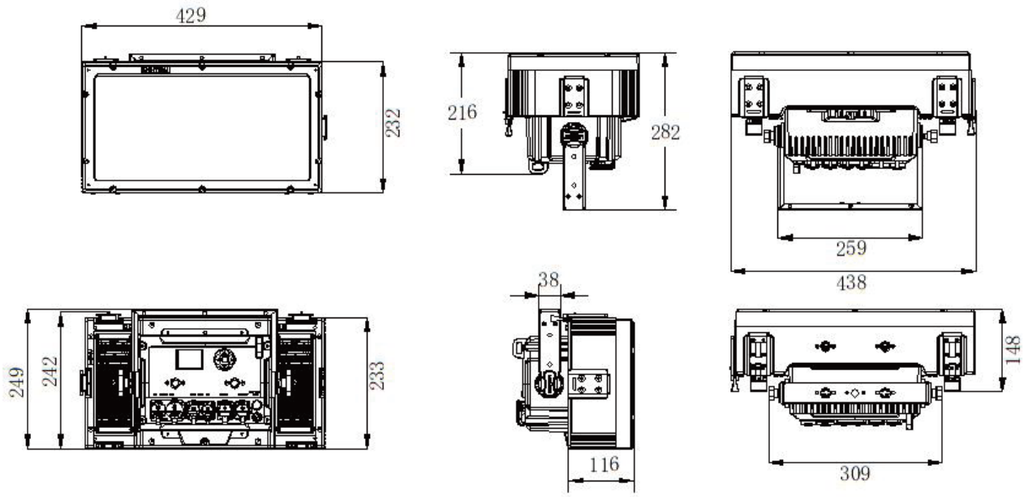

Light source and Optics

- Light source: 180 x 5W CW + 1200 x 0.5W RGB
- Beam Angle: 68°
- Field Angle: 115°
- Color Rendering Index: Ra≥79.2
- Colour Temperature Output: 2500K-10000K
- Lumen Output RGB: 13,882 lm
- Lumen Output W: 34,829 lm
- Illuminance RGB: 338 lx @ 5m
- W: 910 lx @ 5m
- Light Source Theory Life Span: ≥20,000 h

Effects

- Color Mixing System: Uniform RGB color mixing system, each color can be controlled separately, presenting a variety of effects.
- Effect Macros: Static effect macros and dynamic effect macros functions
- Dimming: Electronic dimming, providing four dimming curves
- Strobe: 1-30Hz electronic strobe and random strobe

Control and Programming

- Control Channels: 21 CH(Standard) , 168 CH(Extended), see channel chart for details
- Control Protocols: Standard DMX512 , RDM , Art-Net, sACN
- Data Connection: RJ45(Art-Net) In/Out， 3 pin or 5 pin XLR In/Out
- Display: LCD screen

Software

- Software Upgrade: Via DMX interface
- Intelligent temperature control, ensuring LED lifespan

Power and Electrical

- Input Voltage Range: AC 100-240V 50/60Hz
- Max Power Consumption: 620W
- Strobe Maximum Power: 1500W
- Power Factor: ＞0.99
- Maximum Lamp Current: 6.3A/100V ; 2.8A/220V

Size and Weight

- Product Dimensions: 438mm x 216mm x 249mm
- Net Weight: 13.1 kg
- Carton Dimensions: 510mm x 320mm x 380mm
- Gross Weight: 15.8 kg

Other

- Protection Level: IP66
- Operating Environment: -20℃~45℃
- Maximum Lamp Surface Temperature: 65℃
- Locking System: LiGHT SKY Mortise Locking System

Factory Configuration

- Power Cable: 1 pc (Part No.: F0200030016)
- Signal Cable: 1 pc (Part No.: F0200020008)
- Safety Rope: 1 pc (Part No.: F0200010002)

Optional Accessories/Packaging

- Clamp(LiGHT SKY): Part No.: C0499990075 (Compatible with tubes of Ø40-60 mm)
- Clamp(Neutral): Part No.: C0499990021 (Compatible with tubes of Ø40-60 mm)
- Flycase Dimensions(4 in 1): 960mm x 700mm x 465mm
- Flycase Gross Weight(4 in 1): 86.2kg

Illumination Diagram

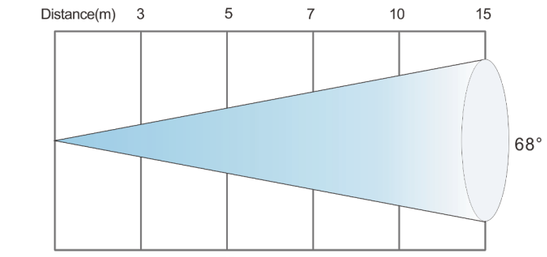

68° Lux	3	5	7	10	15
R	208	75	38	10	8
G	706	254	130	64	28
B	92	33	17	8	4
W	2528	910	464	228	101
RGB	939	338	172	85	38
Diameter(m)	4	6.8	9.5	13.6	20.4

Modularised Effects Series



