LiGHT SKY



AQUAPEARL-SMART

OUTDOOR LED MOVING PIXEL BEAM WASH

FEATURES

- AQUAPEARL SMART is a multifunctional moving head wash light that integrates coloring and beam effects.
- Equipped with 12 pieces of 40W LEDs, featuring a uniform RGBW color mixing system for vibrant and diverse colors.
- Each LED can be controlled independently, offering versatile and customizable color.
- The optical lens can rotate infinitely by 360°, producing vortex and kaleidoscope effects.
- The front luminous circle enables single-point control for dynamic chase effects.
- Features a unique optical design with a zoom range of 3.6° to 50°.
- Includes various built-in color macros and effect macros.
- The product boasts a sleek appearance, compact structure, small size, and lightweight build.
- Ideal for entertainment venues, rental services, TV studios, music festivals, exhibitions, and variety shows.
- IP66 protection rating makes it suitable for outdoor use, capable of withstanding rain and other weather conditions.

Unit: mm

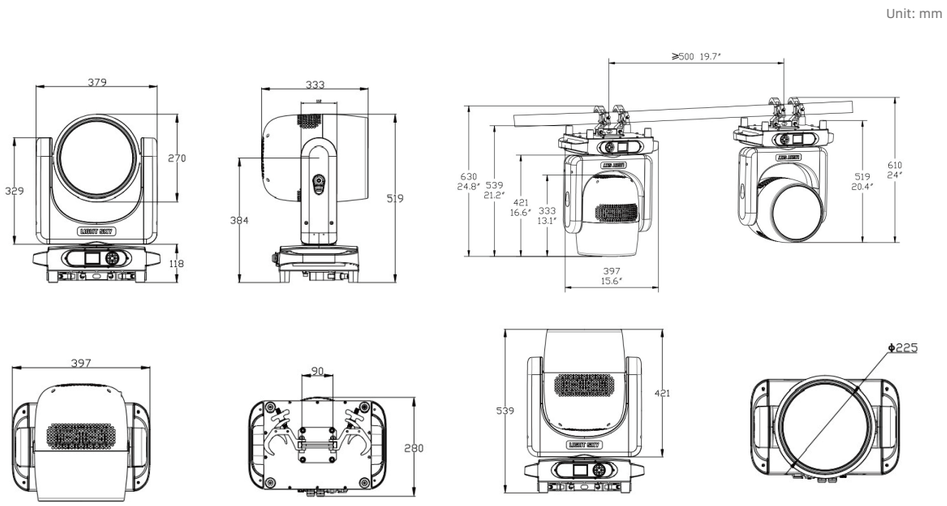

Optics

- Light Source: 12×40W RGBW 4 in 1 LED
- Beam Angle: 3.6° - 40°
- Field Angle: 5° - 50°
- Colour Temperature Output: 2500K - 10000K
- Illuminance: 38,000 lx @ 5 m
- Lumen Output: 7,100 lm
- Light Source Theory Life Span: 30, 000 h

Effects

- Color Mixing System: Uniform RGBW color mixing system and rainbow effect
- Zoom System: Linear electronic zoom
- Pixel Control: Each LED can be controlled independently for versatile color effects
- Front Ring: Each LED can be controlled independently to create dynamic color changing effects
- Effect Macros: Includes static and dynamic effect macro functions
- Dimming: Electronic dimming with four dimming curves, four dimming frequencies, and four dimming speeds
- Strobe: 1-25Hz electronic strobe and random strobe effects

Control and Programming

- Control Channels: 28CH, 40CH, 72CH, 35CH (see channel chart for details)
- Protocols: DMX512, RDM, Art-Net, sACN
- DMX and RDM connectors:3 pin or 5 pin XLR IN/OUT
- Display: LCD screen

Software

- Software Upgrade: DMX signal interface, USB interface (optional)
- Temperature Intelligent Control: Ensures LED lifespan through temperature intelligent control

Pan/Tilt Movement

- Pan: 540°, 8-bit / 16-bit precision
- Tilt: 270° , 8-bit / 16-bit precision
- Automatic reset with error correction
- Tilt Lock

Power and Electrical

- Input Voltage Range: AC 100-240V 50/60Hz
- Max Power Consumption: 560W
- Power Factor: 0.996
- Maximum Current of Fixture: 2.43A/220V; 5.0A/110V

Size and Weight

- Product Dimensions: 397mm × 280mm × 539mm
- Net Weight: 21.1 kg
- Carton Dimensions: 470mm × 350mm × 670mm
- Gross Weight: 25.3 kg

Other

- IP Rate: IP66
- Operating Environment: -20℃ ~ 45℃
- Maximum Surface Temperature of Fixture: 55℃

Factory Configuration

- Power Cable: 1 pc (Part No.: F0200030016)
- Signal Cable: 1 pc (Part No.: F0200020008)
- Safety Rope: 2 pcs (Part No.: F0200010010)
- Clamp: 1 set, Compatible with tubes of Ø40-60 mm(Part No.: C0499990062)

Optional Accessories/Packaging

- Flycase Part No.: B0101090001
- Flycase Dimensions(2 in 1): 720mm × 520mm × 745mm
- Flycase Gross Weight(2 in 1): 81.0kg

Illumination Diagram

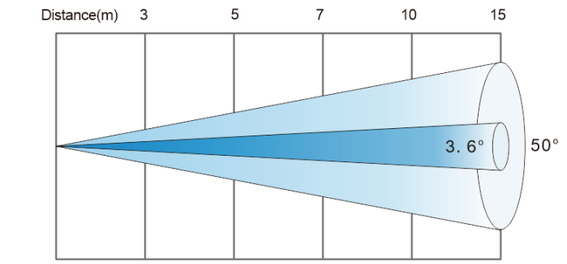

3.6° Lux R	14467	5208	2657	1302	579
G	35114	12641	6449	3160	1405
B	5781	2081	1062	520	231
W	43958	15825	8074	3956	1758
RGBW	105556	38000	19388	9500	4222
Diameter (m)	0.19	0.32	0.45	0.64	0.96
50° Lux R	386	139	71	35	15
G	942	339	173	85	38
B	153	55	28	14	6
W	1178	424	216	106	47
RGBW	2450	882	450	221	98
Diameter (m)	2.78	4.63	6.48	9.26	13.89

