LiGHT SKY

www.lightsky.com.cn

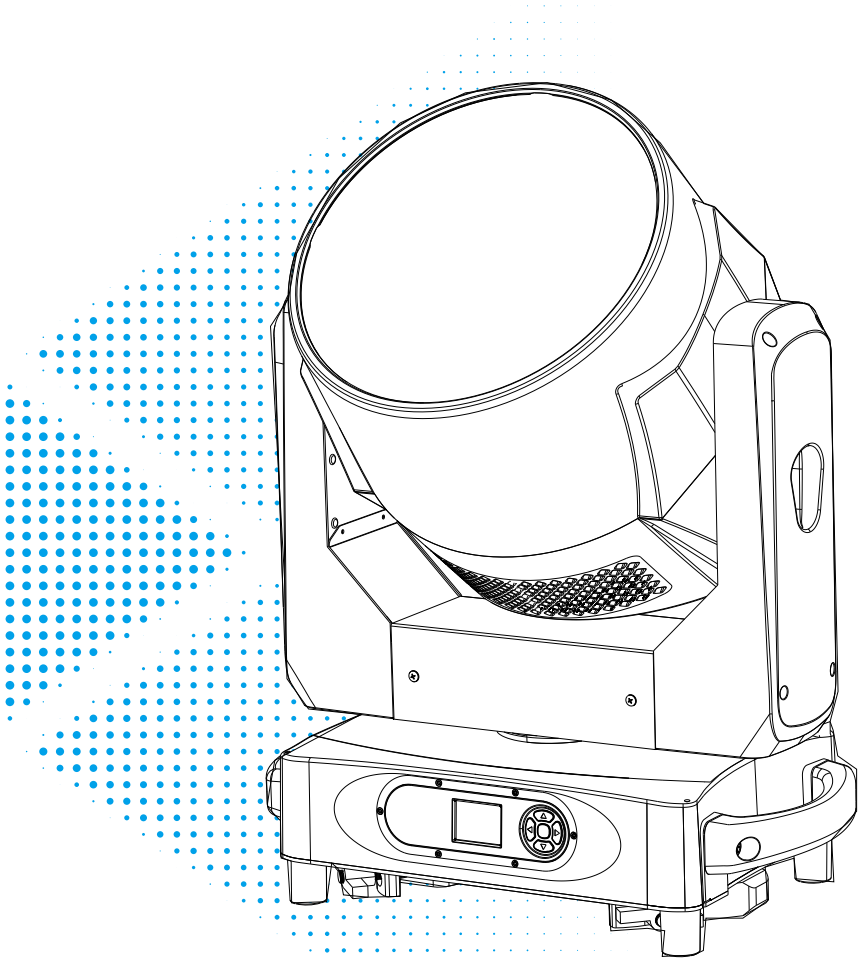

AQUAPEARL-PRO

User Manual

Please read the instruction carefully before use

Fly Dragon Lighting Equipment Co., Ltd.

Add : NO.4 JINGNENG ROAD 1, HUADU DISTRICT, GUANGZHOU, CHINA.
Tel : 020-61828288 Fax : 020-61828188 Postal Code : 510820
Email : flydragon@lightsky.com.cn

Social Media

LiGHT SKY Wechat

Contents

1. Safety information.....2
2. Technical information.....4
3. Attachment and body size.....6
4. Installation and connecting.....7
5. Control panel.....10
6. Menu setting.....11
7. Channel function.....16
8. Circuit connecting diagram.....28
9. Cleaning and maintenances.....29
10.Troubeshooting.....30
11.Duty exonerative and copyright protection.....31

Congratulations on choosing our company product! We thank you for your custom.

◆Please note that this product, as all the others in the rich my company range, has been designed and made with total quality to ensure excellent performance and best meet your expectations and requirements.

◆Carefully read this user manual in its entirety and keep it safe for future reference. It is essential to know the information and comply with the instructions given in this manual to ensure the fitting is installed, used and serviced correctly and safely.

◆My company disclaims all liability for damage to the fitting or to other property or persons deriving from installation, use and maintenance that have not been carried out in conformity with this user manual, which must always accompany the fitting.

◆My company reserves the right to modify the characteristics stated in this user manual at any time and without prior notice.

SAFETY INFORMATION



■This lighting fixture is for professional use only - it is not for household use.

■ Installtion

Make sure all parts for fixing the projector are in a good state of repair.
Make sure the point of anchorage is stable before positioning the projector.
The safety chain must be prgperly hooked onto the fitting and secured to the framework.
When suspending the fixture, ensure that the supporting structure and all hardware used can hold at least 10 times the weight of all the devices they support.



■ Mounting surface and fire protection

Please do not install the fixture onto combustible surface.
Keep all combustible materials at least 1 m away from the fixture.
Ensure a minimum clearance of 0.5m around the cooling fans and ventilation.
Do not expose the front glass to sunlight or other strong light source from any angle.
Lenses can focus the sun's rays inside the fixture, creating a potential fire hazard.



t_a 40℃

■ Maximum ambient temperature

This fixture is suitable for indoor use and wet locations. Do not immerse in water.
The ambient temperature Ta: −20℃～40℃.

■ Protection against electrical shock



Connection must be made to a power supply system fitted with efficient earthing (**Class I** appliance according to standard EN 60598-1).
It is,moreover, recommended to protect the supply lines of the projectors from indirect contact and/or shorting to earth by using appropriately sized residual current devices.

■ Connection to mains supply



The double insulation between the LV power supply and the control conductor on the fixture.
Connection to the electricity mains must be carried out by a qualified electrical installer.
Check that the mains frequency and voltage correspond to those for which the projector is designed as given on the electrical data label.
This label also gives the input power to which you need to refer to evaluate the maximum number of fittings to connect to the electricity line, in order to avoid overloading.
Don't use the power cable when the insulation is damaged.
It must be the manufacturer or distributor or the professional person to change the damaged power cable in order to avoid any dangerous.





■Temperature of the external surface

The maximun temperature that can be reached on the external surface of the fitting, in a thermally steady state,is 55℃。

Avoid contact bypersons and materials.

Allow the fixture to cool for at least 5 minutes before handling.



■ Maintenance

In the event of a serious operating problem, stop using the fixture.

There are no user serviceable parts inside the unit. Do not open the housing or attempt any repairs yourself. In the unlikely event your unit may require service, please contact your nearest dealer.

Before starting any maintenance work or cleaning the fixture,cut off power from the mains supply.



■ Protection against explosion

The protection screen, lens or ultraviolet screen on the lamp can be damaged to the degree of failure if visible damage, such as a crack or deep mark, should be replaced。



■Protection optical radiation

Never look directly into the light source. You risk injury to your retina, which may induce blindness. Do not look at LEDs with magnifiers, telescopes, binoculars or similar optical instruments that may concentrate the light output.



■Battery

This product contains a rechargeable lead-acid battery. To preserve the environment, please dispose the battery at the end of its life according to the regulation in force.

■APPROVALS



The product implementation standard: IEC 60598-1、IEC 60598-2-17

Approved certifications: CE、RoHs

The product complies with the following EU directives:

Low Voltage Directive 2014/35/EU . EMC Directive 2014/30/EU

TECHNICAL INFORMATION

OPTICS

- Light source: OSRAM 19X40W RGBW LED
- Beam angle: 5 °~25 °
- Spot angle: 7 °~45 °
- Color temperature: 2500K-10000K
- Illuminance: 31425 lux @ 5 meters
- Luminous flux: 9653 Lm
- Average lifespan of light source: 30000H(*Lifespan subject to factors including environmental conditions, dimming control, power supply, voltage, switching cycles, operation mode and others.)

EFFECT

- Color Mixing System: Uniform RGBW Color Mixing System and Rainbow Effect.
- Zoom system: linear electric zoom
- Single point control: The light source supports independent control of a single element, with outstanding transformation effects.
- Front aperture: The front aperture can be controlled at a single point, allowing for free pursuit of flowing color changing effects.
- Effect macros: static effect macros and dynamic effect macros functions.
- Dimming: Electronic dimming, providing four dimming curves+four dimming frequencies+four dimming speeds.
- Strobe: 1-30Hz electronic strobe and random strobe.

CONTROL AND PROGRAMMING

- Control channels: standard 26CH, 45CH, 98CH, 79CH, 22CH, 16CH, 39CH, 35CH, see channel table for details.
- Control protocols: Standard DMX512 protocol, RDM protocol, Art Net protocol.
- Data connection: Three core or five core signal input/output
- Display: LCD screen

SOFTWARE

- Upgrade software through DMX signal interface
- Upgrade software via USB interface (optional)
- Intelligent temperature control ensures LED lifespan

X/Y AXIS MOTION ANGLE

- X-axis: 540 ° (8-bit/16bit precision scanning)
- Y-axis: 218 ° (8-bit/16bit precision scanning)
- Reset function with automatic error correction
- Fixed lock: Y-axis lock

POWER

- Input voltage: AC 100-240V 50/60Hz
- Maximum power: 800W
- Power factor: 0.985
- Maximum current of the lamp: 3.64A/220V, 7.3A/110V

DIMENSION

- Product size: 470 × 333 × 563mm
- N.W.: 29.0 kg
- Carton packaging (default): 540 × 410 × 645mm
- G.W.: 33.8 kg
- Flycase Size（2 sets）： 925×580×785mm
- G.W.:101.8 kg

OTHER

- Protection level: Ip66
- Working environment: -20 ℃~40 ℃
- Maximum surface temperature of lamp body: 55 ℃

illumination diagram

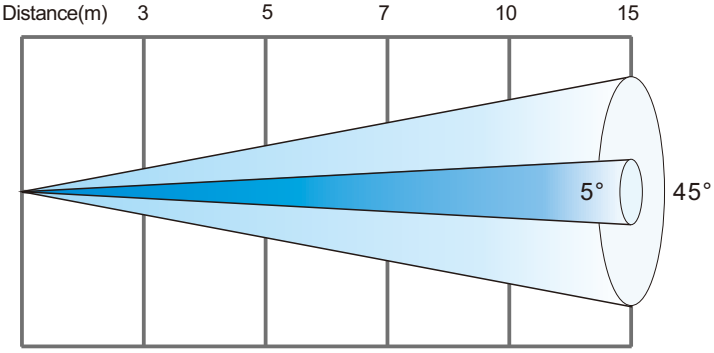

5° Lux R	14203	5113	2609	1278	568
G	25919	9331	4761	2333	1037
B	5614	2021	1031	505	225
W	42044	15136	7722	3784	1682
RGBW	87292	31425	16033	7856	3492
Diameter(m)	0.26	0.43	0.61	0.86	1.29
45° Lux R	892	321	164	80	36
G	1706	614	313	154	68
B	394	142	72	36	16
W	2583	930	474	233	103
RGBW	5350	1926	983	482	214
Diameter(m)	2.48	4.13	5.78	8.27	12.38

ATTACHMENT AND BODY SIZE

1

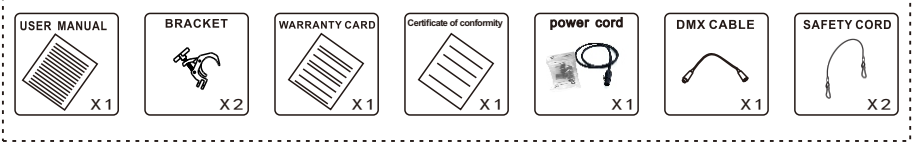

Attachment contents- Fig. 1

2

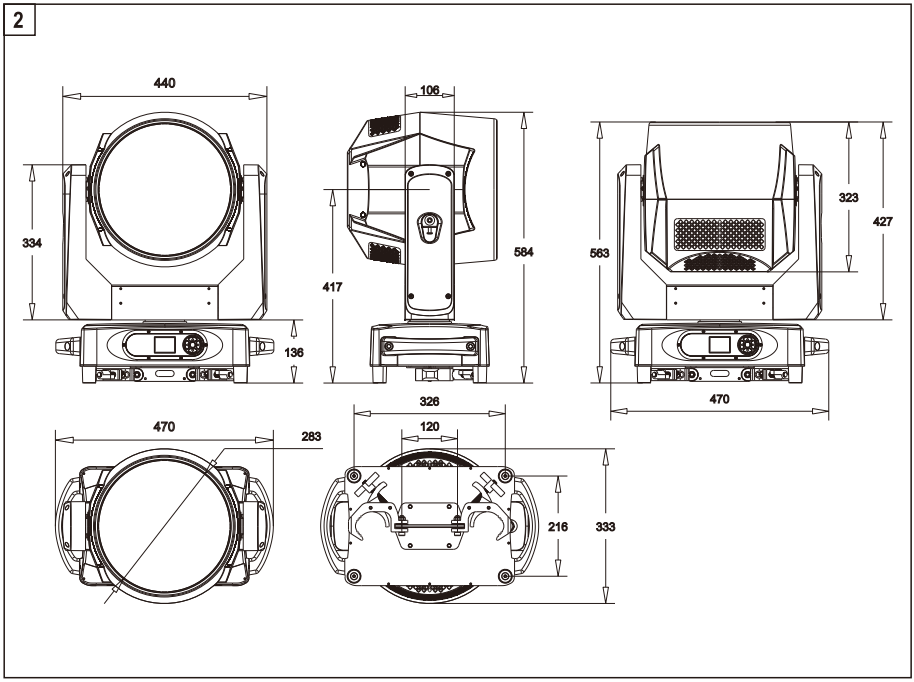

Body Size---Fig 2 (Unit: mm)

INSTALLATION AND CONNECTING

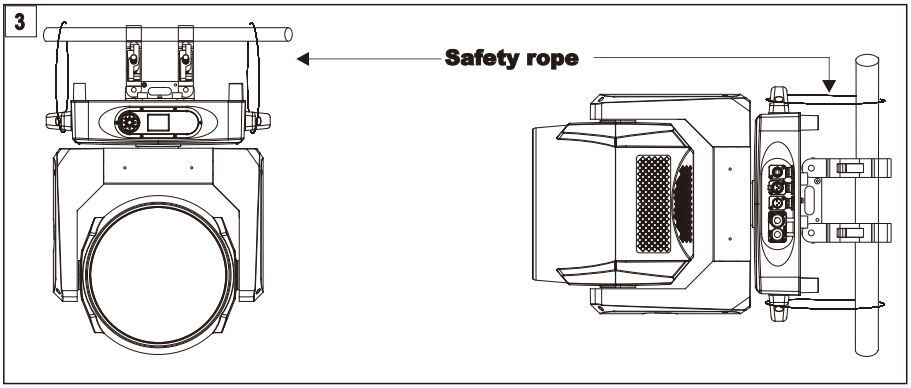

Installing the projector- Fig. 3

Compact,standard clamp system equipped & easy installation

The projector can be installed on the floor resting on special rubber feet, on a truss or on the ceiling or wall.
WARNING:with the exception of when the projector is positioned on the floor, the safety rope must be fitted. This must be securely fixed to the support structure of the projector and then connected to the fixing point at the centre of the base.

Make sure all parts for fixing the projector are in a good state of repair.
Make sure the point of anchorage is stable before positioning the projector.
When suspending the fixture, ensure that the supporting structure and all hardware used can hold at least 10 times the weight of all the devices they support.

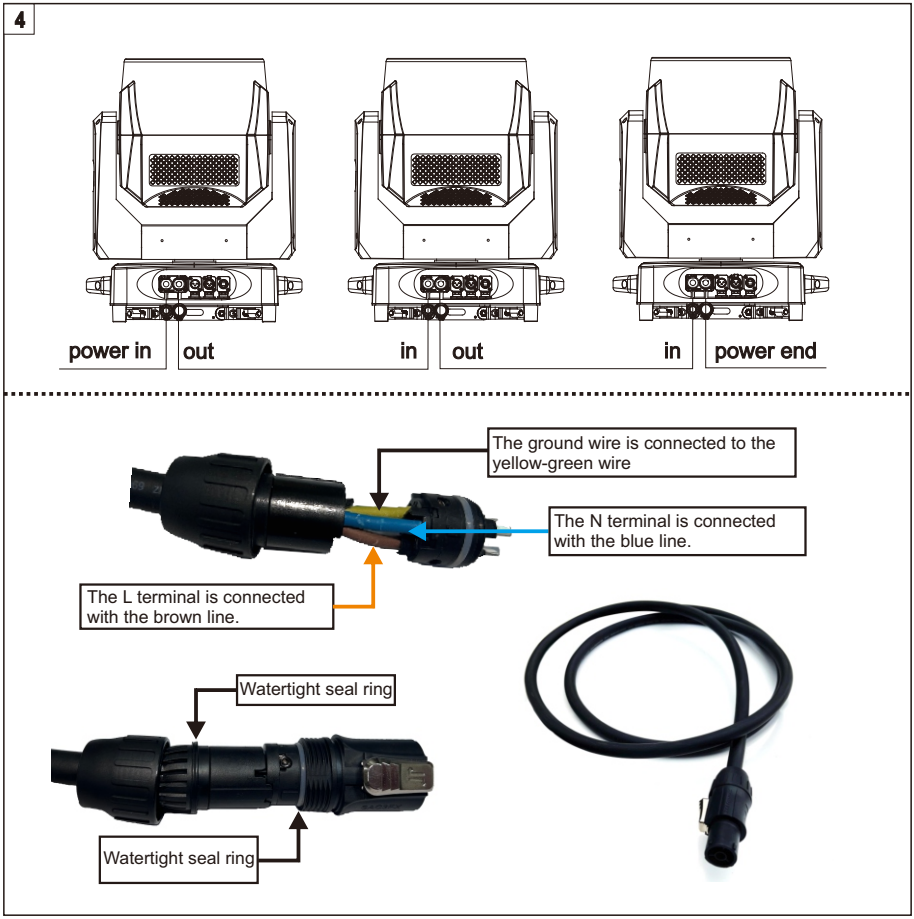

Connecting to the mains suppply ---Fig 4

- The stage lighting power supply can not be more than 2pcs pre line
- connection to the eiectricty mains must be carried out by a qualified electrical installer.
- After doing the above operation and making sure all the devices had been installed with natural operate, press the power switch to check whether every -thing is working normally.

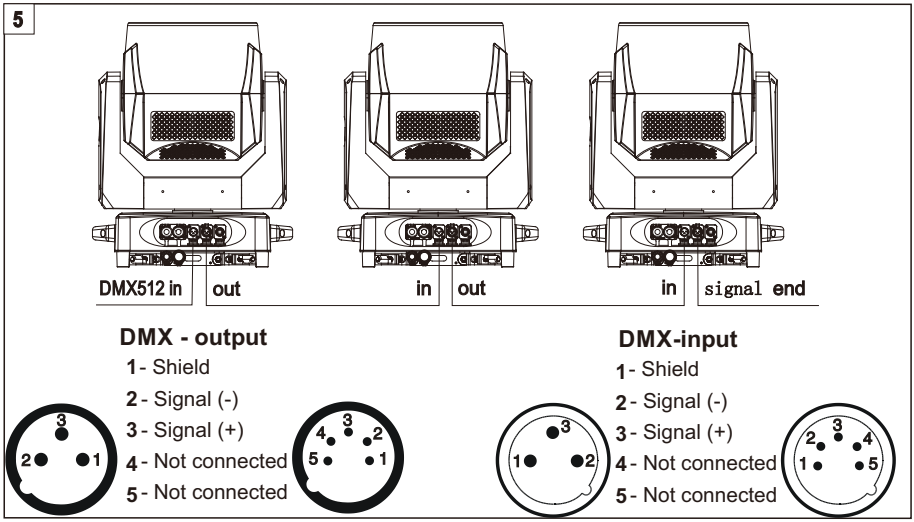

Connecting to the control signal line (DMX) - Fig. 5

◎ Please use the round 3 or 5-pin XLR plugs &sockets offered by menu facture to connect the first projector's output to the second projector' input and connect the second projector's output to the third projector's input. And in the same way for the rest,eventually connect the last projector's output,all the projectors are together.

◎The projectors's control signal output or input by using the 3 or 5-pin XLR pug and socket.If need to lengthen the communication cable,please make sure the both side of 3 or 5-pin plug is one to one . (one to one,two to two,three to three).Otherwise,the communication cable will be interrupted.The communicate cable is 2-cord screened cable 75Ω resistance with each core is at least a 0.5mm diameter.(**Caution:**All the inside leading wire of 3 or 5-pin XLR plug couldn't touch each other or plinth).

◎Recommend to use the DMX signal terminator for the installation to avoid the electronic noise dama -ge the digital control signal.Simply speaking,DMX terminator is an XLR connector with a 120Ω 1/2W resistor connected across pin 2 and 3.Which is then plugged into the output socket on the last projec -tor in the chain.Refer to the connection.

CONTROL PANEL

6

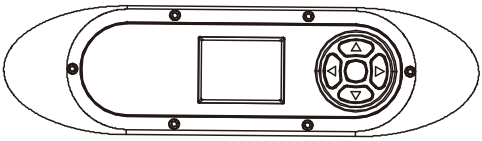

Up arrowhead : page up
Down arrowhead : page down
Left arrowhead : reduce
Right arrowhead : increase
Enter : OK function
Exit : in the choice screen

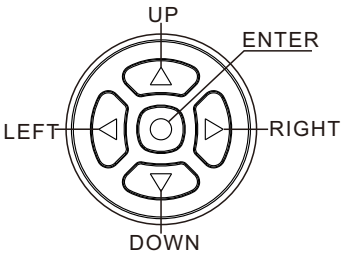

● **Press the switch. The projector starts resetting the effects. At the same time, the following information scrolls on the display(please refer to the actual material):**

7

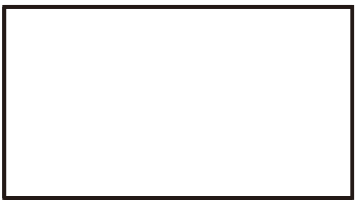

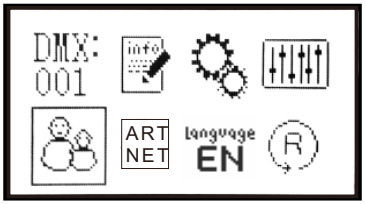

DMX: 001 DMX Address | Information | Persona | Manual control

Service | TEST Art-Net | Language EN | R Reversal

MENU SETTING

Main menu	Ⅰmenu	Ⅱ menu	Ⅲ menu	Ⅳ menu
DMX Seettings	Address			
	DMX Signal mode	Wire priority		
		ARTNET priority		
	ART-NET	IP address	No Artnet board	
		Mask Address		
		Net Address		
		Sub net Address		
		UniverseAddress		
		Return(ESC)		
	Return(ESC)			
Information	Total Time	Power On: ****(h)		
		LED On: ****(h)		
	Temperature	LED TEMP:00.0		
	Logged temperature	LED temperature	Cur TEMP: **.*	
			Max TEMP:**.*	
			Min TEMP:**.*	
		Return(ESC)		
	Fan information	led fan	1.Power:**.*V	
			2.Sp-Fan1:****%	
			3.Sp-Fan2:****%	
			4.Sp-Fan3:****%	
			5.Sp-Fan4:****%	
			6.Sp-Fan1:****R	
			7.Sp-Fan2:****R	
			8.Sp-Fan3:****R	
			9.Sp-Fan4:****R	
		Return(ESC)		
	RDM UID	3888:********		
	DMX live	1.Pan ***		
		2.Pan Fine ***		
		3.Tilt ***		
		4.Tlit Fine ***		
		5.Function ***		
		6.zoom ***		
		7.Zoom fine ***		
		8.Dimmer ***		
		9.Dimmer Fine ***		
		10.Shutter ***		

Main menu	Ⅰmenu	Ⅱ menu	Ⅲ menu	Ⅳ menu
Information	DMX live	11.Macro ***		
		12.CCT ***		
		13.Sta Effect ***		
		14.MoveEffect ***		
		15.EffectSP ***		
		16.LED Fade ***		
		17.Back Color ***		
		18.Back Dimmer ***		
		19.Red ***		
		20.Green ***		
		21.Blue ***		
		22.White ***		
		23.Auar Dimmer ***		
		24.Auar color macro ***		
		25.Auar EffectMac ***		
		26.Auar EffectSP ***		
	System version	XY: V*.**		
		LED: V*.**		
		Zoom: V*.**		
		DIS: V*.**		
	Return(ESC)			
Personal	Display lock	OFF		
		ON		
	Channel mode	Mode-1(26CH)		
		Mode-2(45CH)		
		Mode-3(98CH)		
		Mode-4(79CH)		
		Mode-5(22CH)		
		Mode-6(16CH)		
		Mode-7(39CH)		
		Mode-8(35CH)		
	Fan mode	Auto		
		Stage		
		Studio		
	Dimmer speed	Dimmer sp-1(Fast)		
		Dimmer sp-2		
		Dimmer sp-3		
		Dimmer sp-4(Slow)		

Main menu	Ⅰmenu	Ⅱ menu	Ⅲ menu	Ⅳ menu
Personal	Dimmer curve	Linear		
		Square		
		I-Square		
		SCurve		
	P/T invert	Pan invert	OFF	
			ON	
		Tilt invert	OFF	
			ON	
		Return(ESC)		
	Display	Backlight	Always on	
			Auto off (15s)	
		Rotate	Normal	
			Rotate 180	
		Backlight blink	ON	
			OFF	
		Return(ESC)		
	XY Sensor Power	OFF		
		ON		
	Return(ESC)			
Manual control	Channel control	1.Pan ***		
		2.Pan Fine ***		
		3.Tilt ***		
		4.Tlit Fine ***		
		5.Function ***		
		6.zoom ***		
		7.Zoom fine ***		
		8.Dimmer ***		
Manual control	Channel control	9.Dimmer Fine ***		
		10.Shutter ***		
		11.Macro ***		
		12.CCT ***		
		13.Sta Effect ***		
		14.MoveEffect ***		
		15.EffectSP ***		
		16.LED Fade ***		
		17.Back Color ***		
		18.Back Dimmer ***		
		19.Red ***		
		20.Green ***		

Main menu	Ⅰmenu	Ⅱ menu	Ⅲ menu	Ⅳ menu
Manual control	Channel control	21.Blue ***		
		22.White ***		
		23.Auar Dimmer ***		
		24.Auar color macro ***		
		25.Auar EffectMac ***		
		26.Auar EffectSP ***		
		Return(ESC)		
	Reset	Reset all		
		Pan/Tilt reset		
		Zoom reset		
		Return(ESC)		
	Return(ESC)			
Service	Error information	Error list		
		Empty list	NO	
			YES	
		Return(ESC)		
	Calibration	Pan 000-255		
		Tilt 000-255		
		ZOOM 000-255		
		Red-1 000-255		
		Green-1 000-255		
		Blue-1 000-255		
		White-1 000-255		
		Red-2 000-255		
		Green-2 000-255		
		Blue-2 000-255		
		White-2 000-255		
		Red-3 000-255		
		Green-3 000-255		
		Blue-3 000-255		
		White-3 000-255		
Service	Calibration	Red-4 000-255		
		Green-4 000-255		
		Blue-4 000-255		
		White-4 000-255		
		Return(ESC)		

Main menu	Ⅰmenu	Ⅱ menu	Ⅲ menu	Ⅳ menu
Service	Factory	Load default		
		Reset timers		
		Clear logged temperature		
		Developer		
		Firmware update		
		Return(ESC)		
	Return(ESC)			
Test	Test P/T	STEP ***		
	Test effect	STEP ***		
	Test all	STEP ***		
	Return(ESC)			
Language	English			
	Chinese			
Rotate display	Normal			
	Rotate 180°			

CHANNEL FUNCTION

Standard(26CH)

Channel	DMX	Percentage	Function
1	0-255		Pan
2	0-255		Pan Fine
3	0-255		Tilt
4	0-10		Tilt Fine
5	0-25		No Function
	26-30		Zoom Reset
	31-40		P/T Reset
	41-50		System Reset
	51-255		No Function
6	0-255		Zoom
7	0-255		Zoom Rotation
8	0-255		Dimmer
9	0-255		Dimmer Fine
10			Shutter
	0-9	0-3.5	NO Function
	10-49	3.9-19.2	Slow closing, Fast opening, Fast →slow
	50-89	19.6-34.9	Fast closing, Slow opening, Fast →Slow
	90-119	35.3-46.7	Slow closing, Slow open, Fast →Slow
	120-179	47.1-70.2	Random strobe,Slow → Fast
	180-249	70.6-97.6	Synchronous strobe,slow → Fast
	250-255	98-100	NO Function
11	0-255		Macro
12	0-255		CCT
13	0-255		Static Effect
14	0-255		Move Effect
15	0-255		Move Effect Speed
16	0-255		LED Effect Delay
17	0-255		Background Color
18	0-255		Background Dimmer
19	0-255		Red
20	0-255		Green
21	0-255		Blue
22	0-255		White
23	0-255		Auar Dimmer
24	0-255		Auar Color Macro
25	0-255		Auar Effect Macro
26	0-255		Auar Effect Speed

Mode 2(45CH)

Channel	DMX	Percentage	Function
1	0-255		Pan
2	0-255		Pan Fine
3	0-255		Tilt
4	0-255		Tilt Fine
5	0-25		No Function
	26-30		Zoom Reset
	31-40		P/T Reset
	41-50		System Reset
	51-255		No Function
6	0-255		Zoom
7	0-255		Zoom Rotation
8	0-255		Dimmer
9	0-255		Dimmer Fine
10			Shutter
	0-9	0-3.5	NO Function
	10-49	3.9-19.2	Slow closing, Fast opening, Fast →slow
	50-89	19.6-34.9	Fast closing, Slow opening, Fast →Slow
	90-119	35.3-46.7	Slow closing, Slow open, Fast →Slow
	120-179	47.1-70.2	Random strobe,Slow → Fast
	180-249	70.6-97.6	Synchronous strobe,slow → Fast
	250-255	98-100	NO Function
11	0-255		Macro
12	0-255		CCT
13	0-255		Static Effect
14	0-255		Move Effect
15	0-255		Move Effect Speed
16	0-255		LED Effect Delay
17	0-255		Background Color
18	0-255		Background Dimmer
19	0-255		Red
20	0-255		Green
21	0-255		Blue
22	0-255		White
23	0-255		Color1
24	0-255		Color2
25	0-255		Color3
26	0-255		Color4
27	0-255		Color5
28	0-255		Color6
29	0-255		Color7
30	0-255		Color8
31	0-255		Color9
32	0-255		Color10
33	0-255		Color11

Channel	DMX	Percentage	Function
34	0-255		Color12
35	0-255		Color13
36	0-255		Color14
37	0-255		Color15
38	0-255		Color16
39	0-255		Color17
40	0-255		Color18
41	0-255		Color19
42	0-255		Auar Dimmer
43	0-255		Auar Color Macro
44	0-255		Auar Effect Macro
45	0-255		Auar Effect Speed

Mode 3 (98CH)

Channel	DMX	Percentage	Function
1	0-255		Pan
2	0-255		Pan Fine
3	0-255		Tilt
4	0-255		Tilt Fine
5	0-25		No Function
	26-30		Zoom Reset
	31-40		P/T Reset
	41-50		System Reset
	51-255		No Function
6	0-255		Zoom
7	0-255		Zoom Rotation
8	0-255		Dimmer
9	0-255		Dimmer Fine
10			Shutter
	0-9	0-3.5	NO Function
	10-49	3.9-19.2	Slow closing, Fast opening, Fast→slow
	50-89	19.6-34.9	Fast closing, Slow opening, Fast→Slow
	90-119	35.3-46.7	Slow closing, Slow open, Fast→Slow
	120-179	47.1-70.2	Random strobe,Slow → Fast
	180-249	70.6-97.6	Synchronous strobe,slow → Fast
	250-255	98-100	NO Function
11	0-255		Macro
12	0-255		CCT
13	0-255		Static Effect
14	0-255		Move Effect
15	0-255		Move Effect Speed
16	0-255		LED Effect Delay
17	0-255		Background Color
18	0-255		Background Dimmer
19	0-255		Red-1
20	0-255		Green-1
21	0-255		Blue-1
22	0-255		White-1
23	0-255		Red-2
24	0-255		Green-2
25	0-255		Blue-2
26	0-255		White-2
27	0-255		Red-3
28	0-255		Green-3
29	0-255		Blue-3
30	0-255		White-3
31	0-255		Red-4
32	0-255		Green-4
33	0-255		Blue-4

Channel	DMX	Percentage	Function
34	0-255		White-4
35	0-255		Red-5
36	0-255		Green-5
37	0-255		Blue-5
38	0-255		White-5
39	0-255		Red-6
40	0-255		Green-6
41	0-255		Blue-6
42	0-255		White-6
43	0-255		Red-7
44	0-255		Green-7
45	0-255		Blue-7
46	0-255		White-7
47	0-255		Red-8
48	0-255		Green-8
49	0-255		Blue-8
50	0-255		White-8
51	0-255		Red-9
52	0-255		Green-9
53	0-255		Blue-9
54	0-255		White-9
55	0-255		Red-10
56	0-255		Green-10
57	0-255		Blue-10
58	0-255		White-10
59	0-255		Red-11
60	0-255		Green-11
61	0-255		Blue-11
62	0-255		White-11
63	0-255		Red-12
64	0-255		Green-12
65	0-255		Blue-12
66	0-255		White-12
67	0-255		Red-13
68	0-255		Green-13
69	0-255		Blue-13
70	0-255		White-13
71	0-255		Red-14
72	0-255		Green-14
73	0-255		Blue-14
74	0-255		White-14
75	0-255		Red-15
76	0-255		Green-15
77	0-255		Blue-15
78	0-255		White-15

Channel	DMX	Percentage	Function
79	0-255		Red-16
80	0-255		Green-16
81	0-255		Blue-16
82	0-255		White-16
83	0-255		Red-17
84	0-255		Green-17
85	0-255		Blue-17
86	0-255		White-17
87	0-255		Red-18
88	0-255		Green-18
89	0-255		Blue-18
90	0-255		White-18
91	0-255		Red-19
92	0-255		Green-19
93	0-255		Blue-19
94	0-255		White-19
95	0-255		Auar Dimmer
96	0-255		Auar Color Macro
97	0-255		Auar Effect Macro
98	0-255		Auar Effect Speed

Mode 4 (79CH)

Channel	DMX	Percentage	Function
1	0-255		Pan
2	0-255		Pan Fine
3	0-255		Tilt
4	0-255		Tilt Fine
5	0-25		No Function
	26-30		Zoom Reset
	31-40		P/T Reset
	41-50		System Reset
	51-255		No Function
6	0-255		Zoom
7	0-255		Zoom Rotation
8	0-255		Dimmer
9	0-255		Dimmer Fine
10			Shutter
	0-9	0-3.5	NO Function
	10-49	3.9-19.2	Slow closing, Fast opening, Fast →slow
	50-89	19.6-34.9	Fast closing, Slow opening, Fast →Slow
	90-119	35.3-46.7	Slow closing, Slow open, Fast →Slow
	120-179	47.1-70.2	Random strobe,Slow → Fast
	180-249	70.6-97.6	Synchronous strobe,slow → Fast
	250-255	98-100	NO Function
11	0-255		Macro
12	0-255		CCT
13	0-255		Static Effect
14	0-255		Move Effect
15	0-255		Move Effect Speed
16	0-255		LED Effect Delay
17	0-255		Background Color
18	0-255		Background Dimmer
19	0-255		Red-1
20	0-255		Green-1
21	0-255		Blue-1
22	0-255		Red-2
23	0-255		Green-2
24	0-255		Blue-2
25	0-255		Red-3
26	0-255		Green-3
27	0-255		Blue-3
28	0-255		Red-4
29	0-255		Green-4
30	0-255		Blue-4
31	0-255		Red-5
32	0-255		Green-5
33	0-255		Blue-5
34	0-255		Red-6

Channel	DMX	Percentage	Function
35	0-255		Green-6
36	0-255		Blue-6
37	0-255		Red-7
38	0-255		Green-7
39	0-255		Blue-7
40	0-255		Red-8
41	0-255		Green-8
42	0-255		Blue-8
43	0-255		Red-9
44	0-255		Green-9
45	0-255		Blue-9
46	0-255		Red-10
47	0-255		Green-10
48	0-255		Blue-10
49	0-255		Red-11
50	0-255		Green-11
51	0-255		Blue-11
52	0-255		Red-12
53	0-255		Green-12
54	0-255		Blue-12
55	0-255		Red-13
56	0-255		Green-13
57	0-255		Blue-13
58	0-255		Red-14
59	0-255		Green-14
60	0-255		Blue-14
61	0-255		Red-15
62	0-255		Green-15
63	0-255		Blue-15
64	0-255		Red-16
65	0-255		Green-16
66	0-255		Blue-16
67	0-255		Red-17
68	0-255		Green-17
69	0-255		Blue-17
70	0-255		Red-18
71	0-255		Green-18
72	0-255		Blue-18
73	0-255		Red-19
74	0-255		Green-19
75	0-255		Blue-19
76	0-255		Auar Dimmer
77	0-255		Auar Color Macro
78	0-255		Auar Effect Macro
79	0-255		Auar Effect Speed

Mode 5（22CH）

Channel	DMX	Percentage	Function
1	0-255		Pan
2	0-255		Pan Fine
3	0-255		Tilt
4	0-255		Tilt Fine
5	0-25		No Function
	26-30		Zoom Reset
	31-40		P/T Reset
	41-50		System Reset
	51-255		No Function
6	0-255		Zoom
7	0-255		Zoom Rotation
8	0-255		Dimmer
9	0-255		Dimmer Fine
10			Shutter
	0-9	0-3.5	NO Function
	10-49	3.9-19.2	Slow closing, Fast opening, Fast → slow
	50-89	19.6-34.9	Fast closing, Slow opening, Fast → Slow
	90-119	35.3-46.7	Slow closing, Slow open, Fast → Slow
	120-179	47.1-70.2	Random strobe,Slow → Fast
	180-249	70.6-97.6	Synchronous strobe,slow → Fast
	250-255	98-100	NO Function
11	0-255		Macro
12	0-255		CCT
13	0-255		Static Effect
14	0-255		Move Effect
15	0-255		Move Effect Speed
16	0-255		LED Effect Delay
17	0-255		Background Color
18	0-255		Background Dimmer
19	0-255		Auar Dimmer
20	0-255		Auar Color Macro
21	0-255		Auar Effect Macro
22	0-255		Auar Effect Speed

Mode 6（16CH）

Channel	DMX	Percentage	Function
1	0-255		Pan
2	0-255		Pan Fine
3	0-255		Tilt
4	0-255		Tilt Fine
5	0-25		No Function
	26-30		Zoom Reset
	31-40		P/T Reset
	41-50		System Reset
	51-255		No Function
6	0-255		Zoom
7	0-255		Zoom Rotation
8	0-255		Dimmer
9	0-255		Dimmer Fine
10			Shutter
	0-9	0-3.5	NO Function
	10-49	3.9-19.2	Slow closing, Fast opening, Fast→slow
	50-89	19.6-34.9	Fast closing, Slow opening, Fast→Slow
	90-119	35.3-46.7	Slow closing, Slow open, Fast→Slow
	120-179	47.1-70.2	Random strobe,Slow → Fast
	180-249	70.6-97.6	Synchronous strobe,slow → Fast
	250-255	98-100	NO Function
11	0-255		Macro
12	0-255		CCT
13	0-255		Auar Dimmer
14	0-255		Auar Color Macro
15	0-255		Auar Effect Macro
16	0-255		Auar Effect Speed

Mode 7（39CH）

Channel	DMX	Percentage	Function
1	0-255		Red
2	0-255		Red fine
3	0-255		Green
4	0-255		Green fine
5	0-255		Blue
6	0-255		Blue fine
7	0-255		White
8	0-255		White fine
9	0-255		Linear CTO
10	0-255		Macro colour
11	0-255		Strobe
12	0-255		Dimmer
13	0-255		Dimmer Fine
14	0-255		Pan
15	0-255		Pan Fine
16	0-255		Tilt
17	0-255		Tilt Fine
18	0-255		Function
19	0-255		Reset
20	0-255		Zoom
21	0-255		Zoom ROTA
22	0-255		Shape Selection
23	0-255		Shape Speed
24	0-255		Shape Fade
25	0-255		Shape R
26	0-255		Shape G
27	0-255		Shape B
28	0-255		Shape W
29	0-255		Shape Dimmer
30	0-255		Background Dimmer
31	0-255		Shape Transition
32	0-255		Shape Offset
33	0-255		Foreground Strobe
34	0-255		Background Strobe
35	0-255		Background Select
36	0-255		Auar Dimmer
37	0-255		Auar Color Macro
38	0-255		Auar Effect Macro
39	0-255		Auar Effect Speed

Mode 8（35CH）

Channel	DMX	Percentage	Function
1	0-255		Red
2	0-255		Red fine
3	0-255		Green
4	0-255		Green fine
5	0-255		Blue
6	0-255		Blue fine
7	0-255		White
8	0-255		White fine
9	0-255		Linear CTO
10	0-255		Macro colour
11	0-255		Strobe
12	0-255		Dimmer
13	0-255		Dimmer Fine
14	0-255		Pan
15	0-255		Pan Fine
16	0-255		Tilt
17	0-255		Tilt Fine
18	0-255		Function
19	0-255		Reset
20	0-255		Zoom
21	0-255		Zoom ROTA
22	0-255		Shape Selection
23	0-255		Shape Speed
24	0-255		Shape Fade
25	0-255		Shape R
26	0-255		Shape G
27	0-255		Shape B
28	0-255		Shape W
29	0-255		Shape Dimmer
30	0-255		Background Dimmer
31	0-255		Shape Transition
32	0-255		Shape Offset
33	0-255		Foreground Strobe
34	0-255		Background Strobe
35	0-255		Background Select

CIRCUIT CONNECTING DIAGRAM

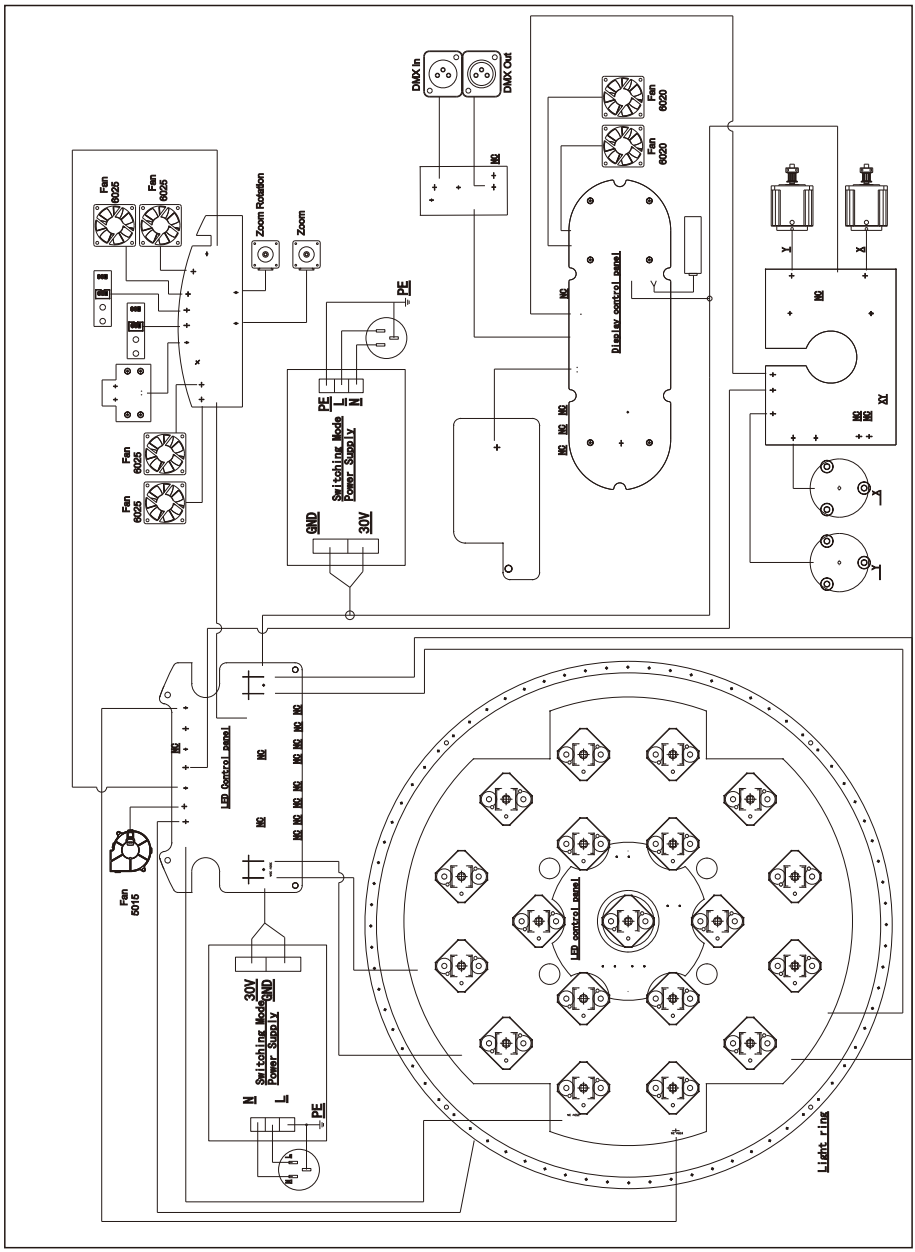

CLEANING AND MAINTENANCES

■1.In order to ensure the projector could work normally. It should be kept clean always . The lens should also be regularly cleaned to maintain an optimum light output. Do not use any type of solvent on lens. It will damage the projector.

■2.Suggestion: The continue usage of the light don't exceed 4 hours. Or it will shorter the usage of the lamp. Please use the alternative operation to solve this problem. The fixture power ON time is best not over 48 hours, or it would generate lamp protection procedure.

■3.Please disconnect the power supply when begin to maintenance take down the light. Please let the parts cool down 10 minute at least then begin to install.

■4.Please inspect the lens or other moving parts timing and keep them clear and static. If find anything damaged or looseness must change a lamp or fix the lamp in order to avoid the accident.

Please check the machenical parts is jamging.After cleaning,please add some temperature -durable juice.

■5.The light use the strong cool system.It iseasy for the dirty to be colletced.Please do clear the hot-sak one time two week at least.

■6. After you use the light,please check the intake place whether there are some wastepaper, please clean it up,or the windmill will break down and causing fire.

CAUTION!
Disconnect from mains before starting maintenance operation.

TROUBESHOOTING

It is recommended some solution for some normal trouble shooting. Any inextricability problems should always be handling by the professional person. Disconnect the power supply before maintenance the light.

■ **LED off** :

1.Please check if install the suitable voltage

2.Please check whether the led will reach the end of their life can explode; please replace a same description led.

3.Please check if the power supply is enough.

4.Please check whether the DMX 512 controller pass the "turn on" order.

■**The light couldn't accept the control order:**

1.Please check the start code address and the function option are correct.

2.Please check whether the communicate control cable is on good connection or the cable is too long or interrupt.

3.Please check the control system is not valid, check the signal amplifier of chain connected is valid.

4.Please check whether the communicate cable is too long or the other equipment is mutually conjugate.

5.Please arrange the wire well, shorter the signal cable, put the high voltage cable and low voltage cable separately.

6.Add the signal amplify isolator.

7.Signal cable is used the excellent screening doublet (Resistance 75 OHM)

8.The end of the light end and the end resistance.

■**The light can't move:**

1.Please check if the power supply is suitable for the light voltage data.

2.Please check the light if they are deformation, inside parts is broken, become wet etc will lead the loose contact.

3.Please check the if the iniside lead wire and the connector is loose.

4.Please check the electric parts(such as the transformer,PCB board,contrller) is short-circuit or burn down.

■**On working,the pan &tilt couldn't work normally:**

◎Please check according to the above step by step.

◎Please check the belt of the X.Y is broken.

◎Please check the X/Y direction data to the receiver is damage.

◎Re-projector reset.

DUTY EXONERATIVE AND COPYRIGHT PROTECTION

◇The lamp belongs to consumption products that is not guarantee to keep it in good repair.

◇Any products broken that didn't according to the instruction is not guarantee to keep it in good repair.

◇The commentary for all the instruction belongs to the supplier in final.

◇No authorize can't copy.

◇The information in this manual may be changed in the future,the company reserve the right to change the data without any advise.