LiGHT SKY



AQUAPEARL-PRO

OUTDOOR LED MOVING PIXEL BEAM WASH

FEATURES

- LED Chip：19pcs×40W RGBW 4 in 1LED, Stable performance, and long life span
- Multifunction:LED Beam and Wash in one, high brightness, long distance, and Wide range of applications.
- IP Rate：IP66, Waterproof, dustproof, and oilproof design, suitable for outdoor use permanently；Individual LED control varied in color and effect.
- Rotating front lens for countless vortex effects，“kaleidoscopic” effect
- LED front ring individual LED control
- Built-in color calibration system, ensure consistent color mixing of each fixture
- 5-45° wide zoom angel

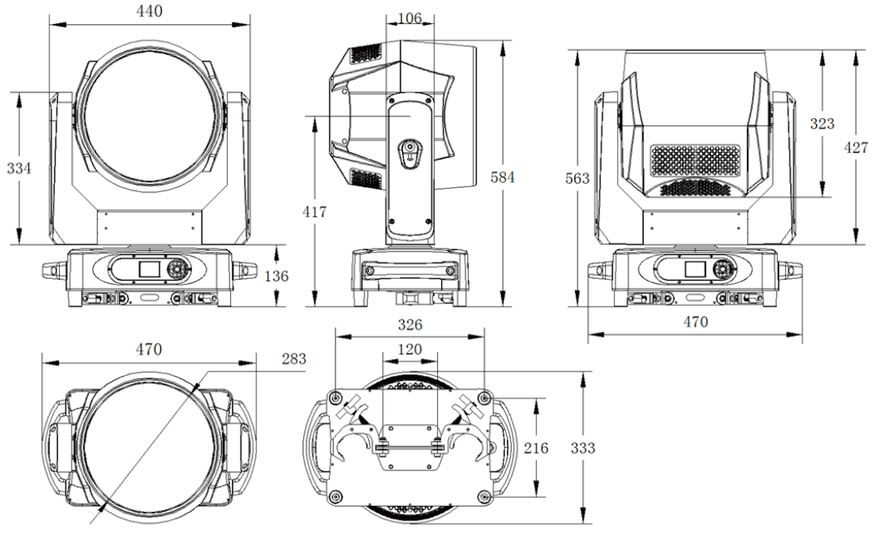

Optics

Light source : OSRAM 19X40W RGBW LED
Beam angle : 5 °~25 °
Spot angle : 7 °~45 °
Color temperature : 2500K-10000K
Illuminance : 31, 425 lx @ 5m
Lumen Output: 9653 lm
Light Source Theory Life Span: 30,000 h

Effects

Color Mixing System : Uniform RGBW Color Mixing System and Rainbow Effect.
Zoom system : linear electric zoom
Single point control : The light source supports independent control of a single element, with outstanding transformation effects
Front aperture : The front aperture can be controlled at a single point, allowing for free pursuit of flowing color changing effects
Effect macros : static effect macros and dynamic effect macros functions
Dimming : Electronic dimming, providing four dimming curves+four dimming frequencies+four dimming speeds
Strobe : 1-30Hz electronic strobe and random strobe

Control and Programming

Control channels : standard 26CH, 45CH, 98CH, 79CH, 22CH, 16CH, 39CH, 35CH
Control protocols : Standard DMX512 protocol, RDM protocol, Art-Net protocol
Data connection : 3 pin or 5 pin signal input/output
Display : LCD screen

Software

Upgrade software through DMX signal interface
Upgrade software via USB interface (optional)
Intelligent temperature control ensures LED lifespan

Pan/Tilt Movement

Pan: 540°, 8-bit / 16-bit precision
Tilt: 218° , 8-bit / 16-bit precision
Automatic reset with error correction
Tilt Lock

Power and Electrical

Input Voltage: AC 100-240V 50/60Hz
Maximum Power: 800W
Power Factor: 0.985
Maximum Current of Fixture: 3.64A/220V; 7.3A/110V

Size and Weight

Product Dimensions: 470mm × 333mm × 563mm
Net Weight: 29.0 kg
Carton Dimensions: 540mm × 410mm × 645mm
Gross Weight: 33.8 kg

Other

IP Rate: IP66
Operating Environment: -20℃ ~ 40℃
Maximum Surface Temperature of Fixture: 55℃

Factory Configuration

Power Cable: 1 pc (Part No.: F0200030016)
Signal Cable: 1 pc (Part No.: F0200020008)
Safety Rope: 2 pcs (Part No.: F0200010002)
Clamp: 1 set(Part No.: C0499990040)

Optional Accessories/Packaging

Flycase Part No.: B0100290001
Flycase Dimensions (2 in 1): 925mm × 580mm × 785mm
Flycase Gross Weight(2 in 1): 101.8kg

Illumination Diagram

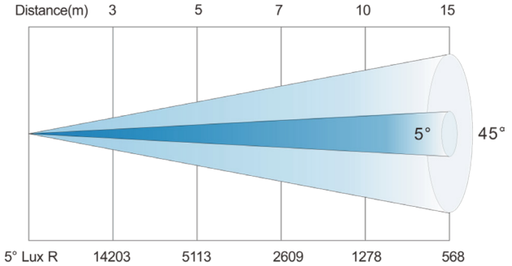

5° Lux R	14203	5113	2609	1278	568
G	25919	9331	4761	2333	1037
B	5614	2021	1031	505	225
W	42044	15136	7722	3784	1682
RGBW	87292	31425	16033	7856	3492
Diameter (m)	0.26	0.43	0.61	0.86	1.29
45° Lux R	892	321	164	80	36
G	1706	614	313	154	68
B	394	142	72	36	16
W	2583	930	474	233	103
RGBW	5350	1926	983	482	214
Diameter (m)	2.48	4.13	5.78	8.27	12.38

