LiGHT SKY

www.lightsky.com.cn

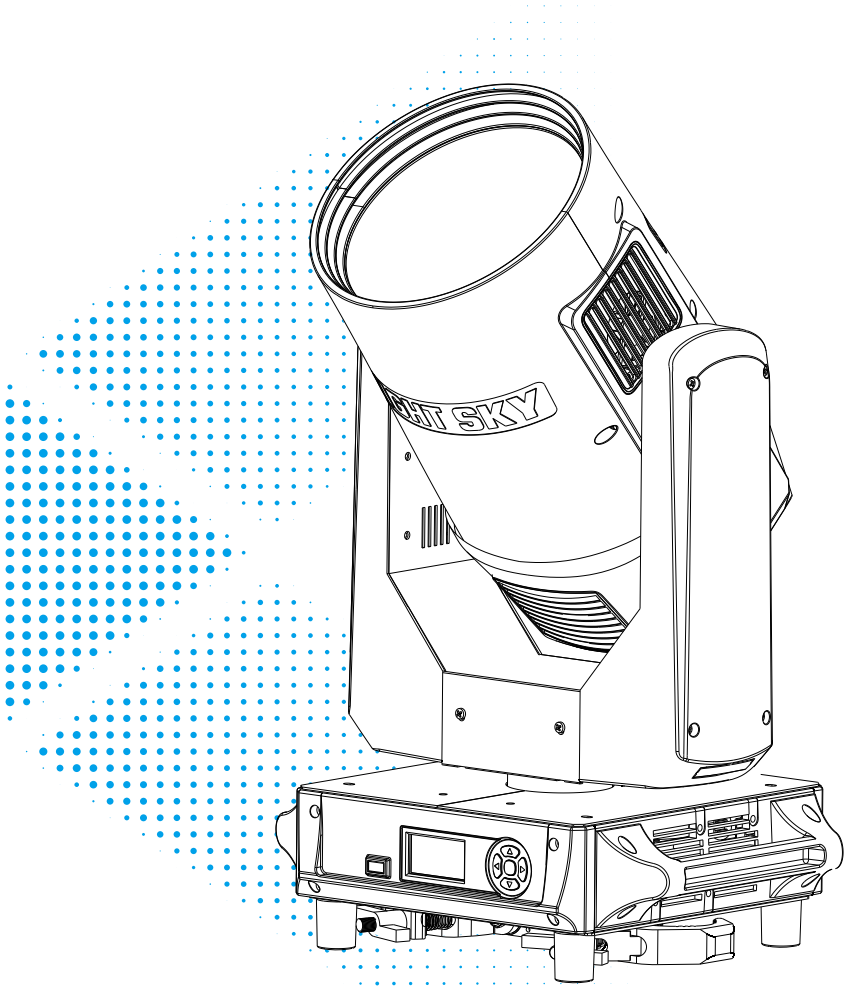

LUNAR MAX

User Manual

Please read the instruction carefully before use

Fly Dragon Lighting Equipment Co., Ltd.

Add : NO.4 JINGNENG ROAD 1, HUADU DISTRICT, GUANGZHOU, CHINA.
Tel : 020-61828288 Fax : 020-61828188 Postal Code : 510820
Email : flydragon@lightsky.com.cn

Social Media

LiGHT SKY Wechat

CONTENTS

1. Safety Instructions.....2
2. Technical Specifications.....5
   2.1. Attachment And Size.....7
3. Color/Gobo/Prism.....8
4. Connection and control.....9
   4.1. Power supply connection.....9
   4.2. DMX 512 Connection.....10
   4.3. Control Panel.....11
5. How To Set The Unit.....11
   5.1. Main Function.....11
   5.2. Channel Setting.....19
   5.3. Address Setting.....19
   5.4. DMX 512 Configuration.....20
6. Electrical Connection Diagram.....29
7. Troubleshooting.....30
8. Fixture Cleaning.....35
9. Duty exonerative and copyright protection.....35

Congratulations on choosing our company product! We thank you for your custom.

- Please keep in mind that this product, like other products of the company, adheres to the concept of people-oriented design and manufacture, and takes product quality as the foundation.
- We put the interests of customers first, and do our best to meet customer requirements.
- Please read this instruction manual carefully and keep it for future reference. In the case of fully understanding the product information, strictly abide by theUse the instruction manual to ensure that the product is installed, used and serviced correctly and safely.
- Our company is not responsible for any damage to lamps or other performance due to personal failure to follow the instructions during installation, use and maintenance.responsibility.
- Our company reserves the right to modify the manual at any time and without prior notice.

1.Safety Instructions

Please read the instruction carefully which includes important information about the installation, usage and maintenance.

WARNING

Please keep this User Manual for future consultation. If you sell the unit to another user, be sure that they also receive this manual.

The following symbols are used to identify important safety information on the product and in this manual:

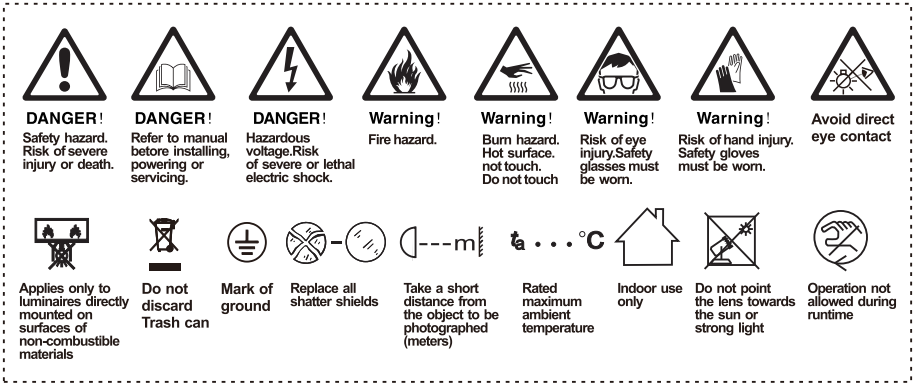

Important:

Damages caused by the disregard of this user manual are not subject to warranty.

The dealer will not accept liability for any resulting defects or problems.

- Unpack and check carefully to ensure that there is no transportation damage before using the unit.
- This product is for indoor use only. Use only in a dry location.
- Do install and operate by qualified operator.
- The light source in this luminaire should be replaced by the manufacturer or its service agent or a similarly qualified person, always cut off the power supply before replacing he light source.
- Do not allow children to operate the fixture.
- Use safety chain when fixing the unit. Handle the unit by carrying its base instead of head only.

- The unit must be installed in a location with adequate ventilation, at least 20cm from adjacent surfaces.
- Be sure that no ventilation slots is blocked, otherwise the unit will be overheated.
- Before operation, ensure that you are connecting this product to the proper voltage in accordance with the specifications in this manual or on the product's specification label.
- It's important to ground the yellow/green conductor to earth in order to avoid electric shock.
- Minimum ambient temperature Ta: 0℃. Maximum ambient temperature Ta: 40℃. Do not operate this product at a lower or higher temperature.
- Do not connect the device to any dimmer pack.
- When the lamp is running, do not place combustible objects next to it. The shortest distance between the device and inflammable and explosive objects or materials is 0.5m.
- Make sure the power cord is not crimped or damaged; replace it immediately if damaged.
- Unit's surface temperature may reach up to 80℃. do not touch the housing bare-handedduring its operation.
- Avoid any flammable liquids, water or metal from entering the unit. once it happens, cut off the mains power immediately.
- Do not operate in a dirty or dusty environment. do clean the fixture regularly.
- Do not touch any wire during operation as there might be a hazard of electric shock.
- Avoid entanglement of the power cord with other wires.
- The minimum distance to objects/surface must be more than 12 meters.
- In the event of serious operating problem, stop using the unit immediately.
- Never turn on and off the unit time after time.
- The housing, the lenses, or the ultraviolet filter must be replaced if they are visibly damaged.
- Do not open the housing as there are no user serviceable parts inside.
- Do not attempt to operate this unit if it becomes damaged. do not attempt any repairs yourself. Repairs carried out by unskilled people can lead to damage or malfunction. Please contact the nearest authorized technical assistance center if needed.

- Disconnect this product from its power source before servicing.
- Do use the original packaging if the device is to be transported.
- Avoid direct eye exposure to the light source while the product is on.
- Do not operate this product if you see damage on the housing, shields, or cables. Have the damaged parts replaced by an authorized technician at once.

Installation:

The fixture should be fixed on the clamp. Always ensure that the unit is firmly fixed to avoid vibration and slipping off during operation. Ensure that the trussing or area of installation must be able to hold 10 times the weight without any deformation. Always install a safety cable that can hold at least 12 times the weight of the fixture when installing.

Do install and operate by qualified operator. It must be installed in a place where there is out of the reach of people.

2.Technical Specifications

OPTICAL

- optics- Light source: OSRAM SIRIUS HRI® 480 SL
- Lamp angle: 1.6° (φ6mm white round hole) / 1.2° (φ4.5mm white round hole) / 0.8° (φ3mm white round hole), flexible switching.
- Optical lens: diameter 200mm
- Color temperature: 6500K
- Color rendering index: Ra≥80
- Light degree: 880000 lux @10M

COLOR

- 14 color chips + white light, can realize two-way color rainbow, two-color step gradient (linear movement), color wheel two-way rotation, random color mode.

PATTERN

- 1 fixed gobo wheel: 17 gobos + white light, can flowing water and shaking effectsthe.

EFFECT

- 6 rows of prisms + 8 prisms + 24 prisms + 48 prisms: can be rotated in both directions, can be switched independently, and can be superimposed.
- Soft light effect: adjustable independent soft light effect.
- Focus: high-precision electric focus.
- Strobe: 0.5-12 times/second adjustable pulse strobe and random strobe.
- Dimming: 0-100% linear adjustment.

CONTROL AND PROGRAMMING

- Control channel: 14CH, 16CH, 16CH PLUS
- Protocol: standard DMX512 protocol, RDM protocol
- Data connection: three-core and five-core signal input/output
- Display: LCD liquid crystal screen

SOFTWARE

- Software upgrade via USB or DMX interface

X/Y axis motion Angle

- X-axis: 540° 8bit/16bit precision scan
- Y-axis: 270° 8bit/16bit precision san

POWER

- Input voltage rangr: AC100-240V 50/60Hz
- Maximum power comsumption: 535W
- Power factor: 0.987

SIZE & WEIGHT

- Size: 380mm×300mm×623mm
- Standard carton packing (Default −1sets) :450mm×390mm×765mm
- N.W: 22.5 Kg G.W: 26.0Kg
- Flycase (option-2 sets) :810mm×530mm×845mm
- N.W: 45.0 Kg G.W: 84.5 Kg

OTHERS

- IP rate: IP20
- Working Ambient: 0 ˚C - 40˚C
- Maximum surface temperature of lamp body: 80˚C
- Maximum current of fixture: 5. 35A/110V； 2. 68A/220V

APPROVALS

- The product implementation standard: IEC 60598-1、IEC 60598-2-17
- Approved certifications: CE、RoHs
- The product complies with the following EU directives:
- Low Voltage Directive 2014/35/EU . EMC Directive 2014/30/EU

illumination diagram

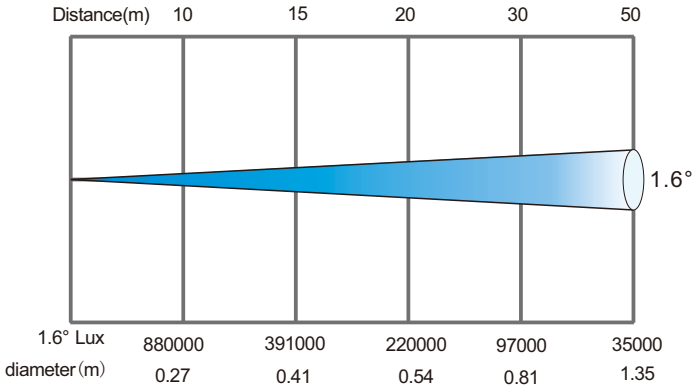

2.1.Attachment And Size

Attachment contents-Fig.1

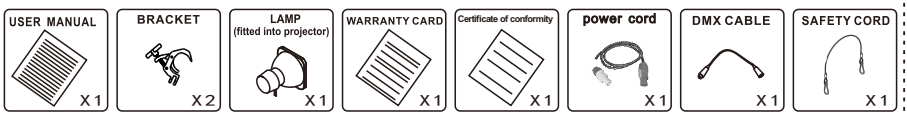

Size-Fig.2

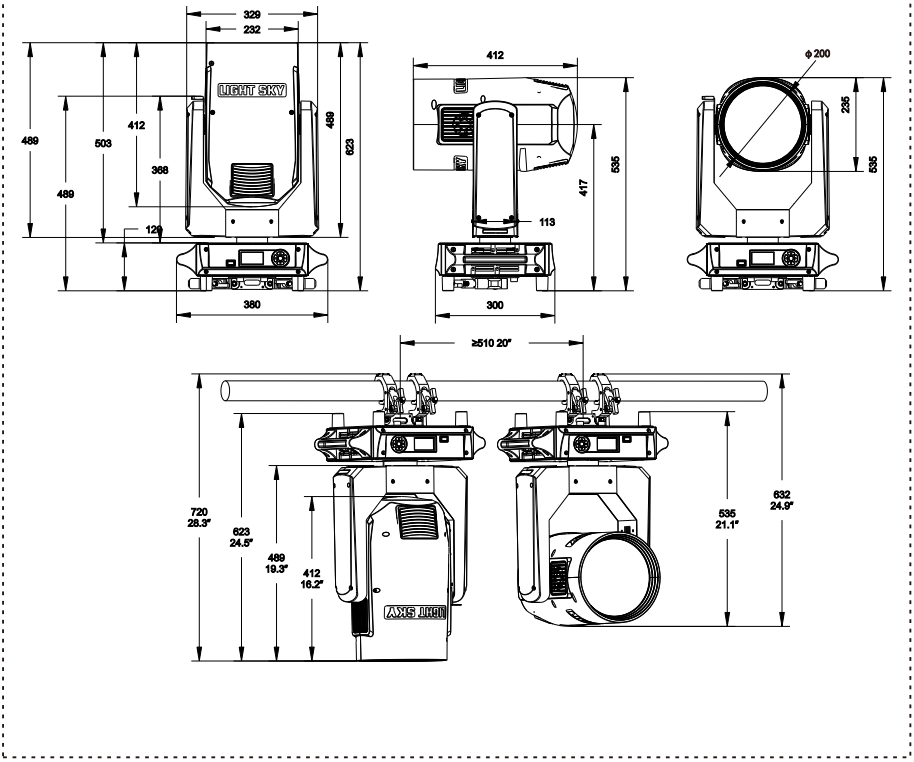

3. Color/Gobo/Prism

Color disk

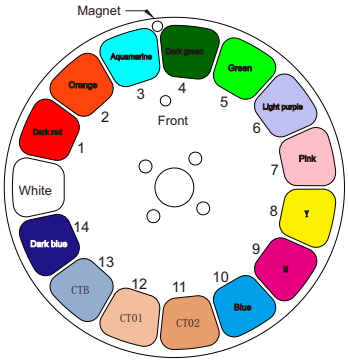

Static gobo wheel

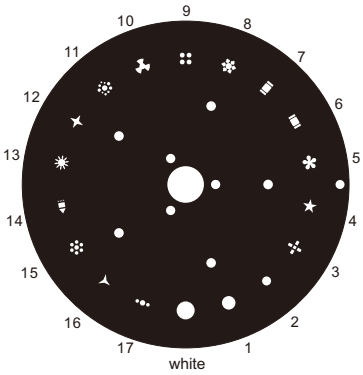

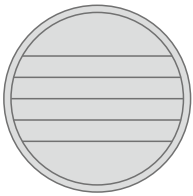

6 Prism

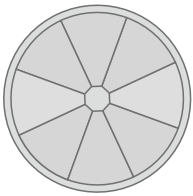

8 Prism

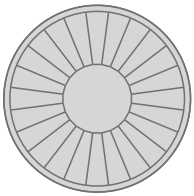

24 Prism

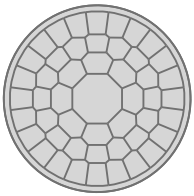

48 Prism

4.Connection and control

4.1.Power supply connection

Blue white headed version

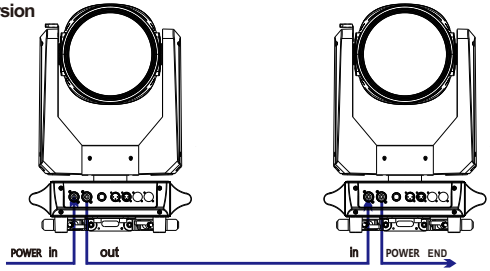

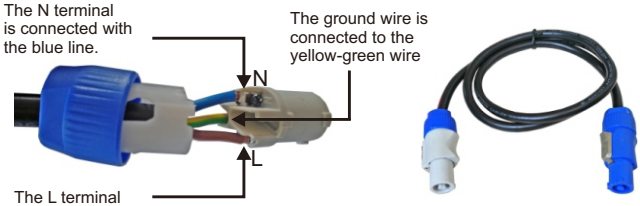

Parallel socket version

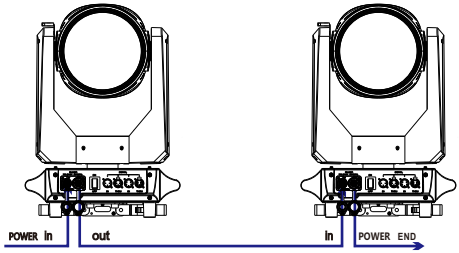

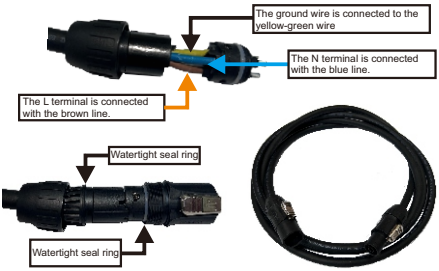

- The bus connecting the power supply must be installed by a qualified professional technician.
- After completing all the above operations and ensuring that it is installed, you can power on the lamp to operate.

4.2.DMX 512 Connection

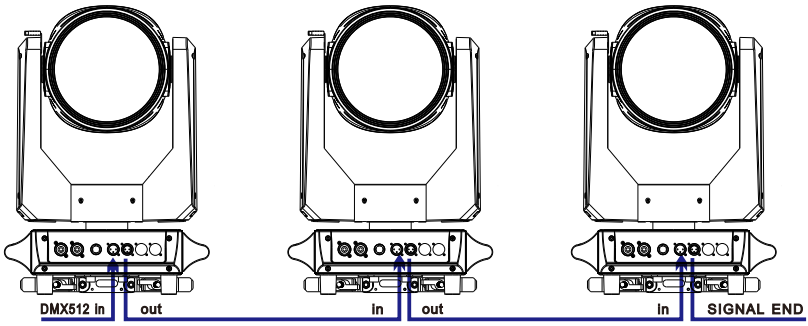

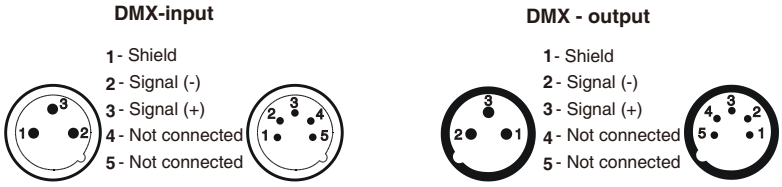

1. At last unit, the DMX cable has to be terminated with a terminator. Solder a 1200hm 1/4W resistor between pin 2(DMX-) and pin 3(DMX+) into a 3-pin XLR-plug and plug it in the DMX-output of the last unit.

2. Connect the unit together in a “daisy chain” by XLR plug cable from the output of the unit to the input of the next unit. The cable cannot be branched or split to a “Y” cable. DMX 512 is a very high-speed signal. Inadequate or damaged cables, soldered joints or corroded connectors can easily distort the signal and shut down the system.

3. The DMX output and input connectors are pass-through to maintain the DMX circuit, when one of the units’ power is disconnected.

4. Each lighting unit needs to have a DMX address to receive the data by the controller. The address number is between 1-512.

5. The end of the DMX 512 system should be terminated to reduce signal errors.

6. 3 pin XLR connectors are more popular than 5 pins XLR.

3 pin XLR: Pin 1: GND, Pin 2: Negative signal (-), Pin 3: Positive signal (+)

5 pin XLR: Pin 1: GND, Pin 2: Negative signal (-), Pin 3: Positive signal (+), Pin4, Pin5 not used.

4.3.Control Panel

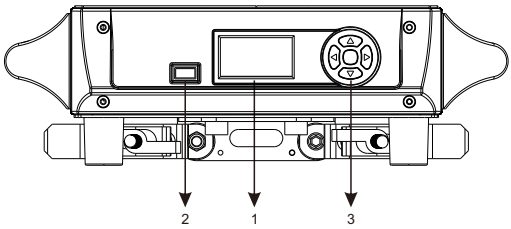

1. Display: To show the various menus and the selected function.
2. USB：Used to update software versions
3. Button：

●	OK confirmation key
▲	UP
▼	DOWN
◀	To the left
▶	To the right

5.How To Set The Unit

5.1.Main Function

The lamp is powered on. When the system initialization and lamp reset are completed, and the standby interface is displayed on the display screen, press OK to enter the preset menu interface. Use the up/down/left/right keys to select ① level menu: DMX address, basic information, personality settings, manual control, service options, bulbs, language, screen rotation.

The main functions are as follows:

Main menu	I menu	II menu	III menu	Ⅳ menu
DMX Address	Address:001-512			
Information	Totel time	Power:****(h)		
		Lamp on:****(h)		
	Lamp hours	Total:****(h)		
		Lamp open:****(h)		
	Temperature	E-ballst:000.0		
		Board:000.0		
	RDM UID	Undistributed		
	Fan speed/Voltag	L_Fan1:0000 RPM		
		L_Fan2:0000 RPM		
		Fan1:0000 RPM		
		Fan2:0000 RPM		
	DMX live	1.Colour (***)		
		2.Shutter (***)		
		3.Dimmer (***)		
		4.Gobo (***)		
		5.Prism (***)		
		6.PrismROTA. (***)		
		7.PrismMacro (***)		
		8.Frost (***)		
		9.Focus (***)		
		10.Pan (***)		
		11.Pan Fine (***)		
		12.Tilt (***)		
		13.Tilt Fine (***)		
		14.Function (***)		
		15.Reset (***)		
		16.LampControl (***)		
	System version	Focus:V*.**		
		XY Board:V*.**		
		Effect:V*.**		
		DIS Board:V*.**		
	Return(ESC)			
Personal	Channel mode	Standard(18CH)		
		Simple(16CH)		
		18CH PLUS		
	Auto lamp on	OFF		
		ON		
	P/T invert	Pan invert	OFF	
			ON	
		Tilt invert	OFF	
			ON	
	Display	Language	English	
			Chinese	
		Back Light	Open	
			Auto close(15s)	
		Reversal	Normal	
			Rota.180	
		Backlight blink	ON	
			OFF	
		Return(ESC)		
	Return(ESC)			
		1.Colour (***)		
		2.Shutter (***)		
		3.Dimmer (***)		
		4.Gobo (***)		
		5.Prism (***)		
		6.PrismROTA. (***)		

Main menu	I menu	II menu	III menu	Ⅳ menu
Manual control →	Channel control →	7.PrismMacro (***)		
		8.Frost (***)		
		9.Focus (***)		
		10.Pan (***)		
		11.Pan Fine (***)		
		12.Tilt (***)		
		13.Tilt Fine (***)		
		14.Function (***)		
		15.Reset (***)		
		16.LampControl (***)		
	Reset →	system reset		
		Pan/Tilt reset		
		Head motor reset		
		Return(ESC)		
	Test →	Test P/T	→ STEP ***	
		Test effect	→ STEP ***	
		Test all	→ STEP ***	
		Return(ESC)		
	Return(ESC)			
Service →	Error list →			
	Clean error →	Keep		
		Clean		
	Calibration →	Pan 000-255		
		Tilt 000-255		
		Dimmer 000-255		
		Focus 000-255		
		Colour 000-255		
		Stat.Gobo 000-255		
		Prism1 000-255		
		Prism2 000-255		
		Prism3 000-255		
		Prism4 000-255		
		PrismRota. 000-255		
		Frost 000-255		
		Return(ESC)		
	Factory →	Defualt		
		Time clean	Total Time	
			Device Time	
			Led Time	
		Developer	Load font	
			LOGO select	LOGO
				Custom LOGO
				No LOGO
			LOGO upgrade	
			Set time	Current time
				End time
				Return(ESC)
		Firmware update		
Lamp →	Off			
	On			
Language →	English			
	Chinese			
Reversal →	Normal			
	Rota.180			

①  **- DMX Address**

Enter the **preset menu** interface，select  function，Press the OK key to enter the lower menu, and use the up/down key to set the lamp address Code (001~497), the default address code of the lamp is 001. After setting, press OK to confirm and return to the upper menu。

①  **- Information**

Enter the **preset menu** interface，select  function，Press the OK key to enter the lower menu, and use the up/down keys to select the② level menu:Total running time, equipment time, equipment temperature, RDM address, fan speed/voltage, equipment channel, software information, exit.

② **Total Time**

Select the **Total Time** function and press the OK key to enter the lower menu to view the equipment: total power on (H) and total bright bulb (H). Press the OK key or the left/right key to return to the previous menu.

② **Totel time function**

Select the **Totel time function** and press the OK key to enter the lower menu to view the equipment: power on time (H) and light on time (H). Press OK key or left/right key to return to the upper menu.

② **Equipment temperature**

Select the **Equipment temperature** function, and press OK to enter the lower menu to view the equipment: temperature measurement board temperature. Press the OK key or the left/right key to return to the previous menu.

② **RDM address**

Select the **RDM address** function and press the OK key to enter the lower menu to view the device: RDM address information. Press the OK key or the left/right key to return to the previous menu.

② **Fan speed/voltage**

Select the **Fan speed/voltage** function and press the OK key to enter the lower menu to view the speed of the equipment: blower 1, blower 2, blower 1 and blower 2. Press the OK key or the left/right key to return to the previous menu.

② **DMX live**

Select the **DMX live** function and press the OK key to enter the lower menu to view the channel information of the equipment in the current channel mode. Press the OK key or the left/right key to return to the previous menu.

② **Version information**

Select the **Version information** function and press the OK key to enter the lower menu to view the version information of the equipment: XY board, effect board and display board. Press the OK key or the left/right key to return to the previous menu.

①  **– Personal**

Enter the **preset menu** interface, select  function, press the OK key to enter the lower menu, and use the Up/Down key to select the ② menu: channel mode, automatic light bulb opening, horizontal and vertical inversion, display setting, exit, press the OK key to enter the lower menu, or press the left key to return to the upper menu.。

② **Channel Mode**

Select the **Channel Mode** function and press OK to enter the lower menu. You can use up/down keys to select: standard mode (16CH), simple mode (14CH), 16CH PLUS. Press OK to confirm the selection and return to the upper menu.

② **Auto lamp on**

Select the **Auto lamp on** function, press the OK key to enter the lower menu, press the Up/Down key to select: On/Off(default), press the OK key to confirm the selection and return to the upper menu.

② **P/T invert**

Select the **P/T invert** function, and press OK to enter the lower menu. You can use up/down keys to select: horizontal reverse and vertical reverse. Press OK to confirm the selection and return to the upper menu.

② **Display Settings**

Select the **Display Settings** function, press the OK key to enter the lower menu, and use the up/down keys to select the③menu: Language, backlight, screen rotation, backlight flashing, and exit. Press the OK key to enter the lower menu, or press the left key to return to the upper menu.

③ **Language**

Select the **Language** function and press OK to enter the lower menu. You can use up/down keys to select Chinese and English. Press OK to confirm the selection and return to the upper menu.

③ **Back Light**

Select the Back Light function, press the OK key to enter the lower menu, use the up/down key to select: normally on, automatically off(15S), press the OK key to confirm and return to the upper menu.

③ **Screen rotation**

Select the **Screen rotation** function, press the OK key to enter the lower menu, and use the up/down key to select: normal (default), 180 degree rotation, press the OK key to confirm and return to the upper menu.

③ **Backlight blink**

Select the **Backlight blink** function, press the OK key to enter the lower menu, and use the up/down key to select: open (default), close, press the OK key to confirm and return to the upper menu.

①  **– Manual control**

Enter the **preset menu** interface, select  function, press the OK key to enter the lower menu, and use the up/down keys to select the ② menu: channel control, reset, test lamps, exit, press the OK key to enter the lower menu, or press the left key to return to the upper menu.

② **Channel control**

Select the **Channel control** function, press the OK key to enter the lower menu, press the Up/Down key to select each channel of the current channel mode, press the Left/Right key to manually adjust the DMX value of each channel from 0 -255, and press the OK key to return to the upper menu.

② **Reset**

Select the **Reset** function, press the OK key to enter the lower menu, and use the up/down keys to select: system reset (i.e. machine reset), horizontal and vertical reset, head motor reset, and exit. Press the OK key to confirm and execute the selected reset command, and return to the upper menu.

② **Test Lamp**

Select the **Test Lamp** function, press the OK key to enter the lower menu, and you can use the up/down key to select: test horizontal and vertical, test head effect, overall test, exit, then press the OK key to confirm the selection, and execute the selected test command, and press the OK key or the left/right key to return to the upper menu.

①  **– Service**

Enter the **preset menu** interface, select  function, press the OK key to enter the lower menu, you can use the up/down keys to select: historical fault information, clear fault information, calibration, factory setting, exit, press the OK key to enter the lower menu, or press the left/right key to return to the upper menu.

② **Error list**

Select the **Error list** function, press OK to enter the lower menu, you can view the fault record of the whole machine, press OK or left/right to return to the upper menu.

② **Clean Error**

Select the **Clean Error** function, press OK to enter the lower menu, use up/down keys to select: Clear, Keep, you can clear or retain the fault records of lamps, press OK to confirm and return to the upper menu.

② **Calibration**

Select the **Calibration** function, press the OK key to enter the lower menu, press the Up/Down key to select each channel of the current channel mode, press the Left/Right key to manually fine tune the DMX value of each channel from 0 to 255 (default 128), and press the OK key to return to the upper menu.

② **Factory Setup**

Select the **Factory Setup** function, press OK key to enter the sub-menu, you can use the up/down key to select: factory default, time clear, developer, software upgrade, exit, press OK key to enter the sub-menu. Note that the functions under this menu require a password to proceed to the next step.

①  – **Lamp**

Enter the **preset menu** interface, select  function, Press OK key to enter the subordinate menu, you can use the up/down key to select: close (default), open, press OK key to confirm and return to the superior menu.

①  – **Language**

Enter the **preset menu** interface, select  function, Press OK to switch between Chinese (default) and English.

①  – **Reversal**

Enter the **preset menu** interface, select  function, Press OK to toggle the screen between normal and rotated 180 degrees.

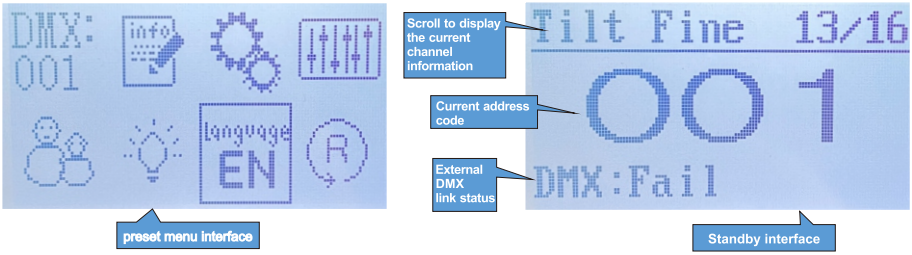

5.2.Channel Setting

Enter the MENU menu, select the personality setting function, select the channel mode, press OK button to confirm, you can use the up and down key to select: 16 channel (default), 14 channel, 16 PLUS channel, press OK key to select confirm and return to the next level menu.

5.3.Address Setting

Enter MENU, select the DMX setting function, select the address code setting, press the OK button to confirm, the current DMX address will be displayed on the display. Use the up/down buttons to select addresses 001~512, and press the OK button to save. Press the OK button to return to the previous menu.

Please refer to the following diagram to address your DMX512 channel for the first 4 units.

Channel mode	Unit **1** Address	Unit **2** Address	Unit **3** Address	Unit **4** Address
16 CH	1	17	33	49
14 CH	1	15	29	43
16 PLUS CH	1	17	33	49

5.4.DMX 512 Configuration

Please control the fixture by referring to the configurations below

16CH

Channel	DMX	Percentage	Function	Note
			Colour	
	0-4	0-1.56	White	
	5-8	1.96-3.14	White+Red	
	9-12	3.53-4.71	Red	
	13-17	5.10-6.67	Red+Orange	
	18-21	7.06-8.24	Orange	
	22-25	8.63-9.80	Orange+Aquamarine	
	26-29	10.2-11.4	Aquamarine	
	30-34	11.8-13.3	Aquamarine+Green	
	35-38	13.7-14.9	Green	
	39-42	15.3-16.5	Green+Light Green	
	43-46	16.9-18.0	Light Green	
	47-51	18.4-20.0	Light Green+Lavender	
	52-55	20.4-21.6	Lavender	
	56-59	22.0-23.1	Lavender+Pink	
	60-63	23.5-24.7	Pink	
1	64-68	25.1-26.7	Pink+Yellow	
	69-72	27.0-28.2	Yellow	
	73-76	28.6-29.8	Yellow+Magenta	
	77-80	30.2-31.8	Magenta	
	81-85	32.2-33.3	Magenta+Cyan	
	86-89	33.7-34.9	Cyan	
	90-93	35.3-36.5	Cyan+CTO 260	
	94-98	36.9-38.4	CTO 260	
	99-102	38.8-40.0	CTO 260+CTO 190	
	103-106	40.4-41.6	CTO 190	
	107-110	42.0-43.1	CTO 190+CTB 8000	
	111-115	43.5-45.1	CTB 8000	
	116-119	45.5-46.7	CTB 8000+Blue	
	120-123	47.1-48.2	Blue	
	124-127	48.6-49.8	Blue+White	
	128-191	50.2-74.9	Fast-Slow Rotation	
	192-255	75.3-100	Slow-Fast Rotation	
			Strobe	
	0-3	0-1.2	Closed	
	4-103	1.6-40.4	Slow-Fast Strobe	
	104-107	40.8-42.0	Open	
2	108-157	42.4-61.6	slow →fast, fast off and slow on	
	158-207	62.0-81.2	Slow → fast, fast on and slow off	
	208-212	81.6-83.1	Open	
	213-251	83.5-98.4	Random Slow-Fast Strobe	
	252-255	99.8-100	Open	
3	0-255	0-100	**Dimmer**	
			Gobo	
	0-3	0-1.2	White	
	4-7	1.6-2.7	Gobo1	
	8-11	3.1-4.3	Gobo2	
	12-15	4.7-5.9	Gobo3	
	16-19	6.3-7.5	Gobo4	
	20-23	7.8-9.0	Gobo5	
	24-27	9.4-10.6	Gobo6	
	28-31	11.0-12.2	Gobo7	
	32-35	12.5-13.7	Gobo8	
	36-39	14.1-15.3	Gobo9	
	40-43	15.7-16.9	Gobo10	
4	44-47	17.3-18.4	Gobo11	
	48-51	18.8-20.0	Gobo12	
	52-55	20.4-21.6	Gobo13	
	56-59	22.0-23.1	Gobo14	
	60-63	23.5-24.7	Gobo15	

Channel	DMX	Percentage	Function	Note
	64-67	25.0-26.2	Gobo16	
	68-71	26.6-27.8	Gobo17	
	72-81	28.2-31.7	Gobo1 Shake Slow-Fast Speed	
	82-92	32.1-36.0	Gobo2 Shake Slow-Fast Speed	
	93-103	36.4-40.3	Gobo3 Shake Slow-Fast Speed	
	104-114	40.7-44.7	Gobo4 Shake Slow-Fast Speed	
	115-124	45.0-48.6	Gobo5 Shake Slow-Fast Speed	
	125-135	49.0-52.9	Gobo6 Shake Slow-Fast Speed	
	136-146	53.3-57.2	Gobo7 Shake Slow-Fast Speed	
	147-157	57.6-61.5	Gobo8 Shake Slow-Fast Speed	
	158-167	61.9-65.4	Gobo9 Shake Slow-Fast Speed	
	168-178	65.8-69.8	Gobo10 Shake Slow-Fast Speed	
	179-189	70.1-74.1	Gobo11 Shake Slow-Fast Speed	
	190-200	74.5-78.4	Gobo12 Shake Slow-Fast Speed	
	201-210	78.8-82.3	Gobo13 Shake Slow-Fast Speed	
	211-221	82.7-86.6	Gobo14 Shake Slow-Fast Speed	
	222-232	87.0-90.9	Gobo15 Shake Slow-Fast Speed	
	233-243	91.3-95.2	Gobo16 Shake Slow-Fast Speed	
	244-255	95.6-100	Gobo17 Shake Slow-Fast Speed	
5			**Prism**	
	0-63	0-24.7	Unused Range	
	64-87		Prism1	
	88-111		Prism2	
	112-135		Prism3	
	136-159		Prism4	
	160-183		Prism1+Prism2	
	184-207		Prism1+Prism4	
	208-231		Prism2+Prism3	
	232-255		Prism3+Prism4	
6			**Prism Rotation**	
	0	0	Unused Range	
	1-63	0.4-24.7	Angle linear adjustment	
	Three kinds of prism effect options: set the prism (prism 1, prism 2 or prism 1+2) in the 5th channel			
	64-127	25.1-49.8	Prism rotates Fast →Slow,counterclockwise	
	128-191	50.2-74.9	Prism rotates Slow →Fast,clockwise rotation	
	192-207	75.3-81.2	Prism rotates Slow →Fast, 90° Rotate back and forth	
	208-223	81.6-87.5	Prism rotates Slow →Fast,180° Rotate back and forth	
	224-239	87.8-93.7	Prism rotates Slow →Fast,270° Rotate back and forth	
	240-255	94.1-100	Prism rotates Slow →Fast,360° Rotate back and forth	
7			**Prism Macro**	
	0-15	0-5.9	Unused Range	
	16-27		Fast →Slow, Prism1 Free switch	
	28-39		Fast →Slow,Prism2 Free switch	
	40-51		Fast →Slow,Prism3 Free switch	
	52-63		Fast →Slow,Prism4 Free switch	
	64-75		Fast →Slow,Prism1+ Prism2 Free switch	
	76-87		Fast →Slow,Prism1+ Prism4 Free switch	
	88-99		Fast →Slow,Prism2+ Prism3 Free switch	
	100-111		Fast →Slow,Prism3+ Prism4 Free switch	
	112-123		Fast →Slow,Prism 1 selected + Prism 2 free switch	
	124-135		Fast →Slow,Prism 1 selected + Prism 4 free switch	
	136-147		Fast →Slow,Prism 2 selected + Prism 1 free switch	
	148-159		Fast →Slow,Prism 2 selected + Prism 3 free switch	
	160-171		Fast →Slow,Prism 3 selected + Prism 2 free switch	
	172-183		Fast →Slow,Prism 3 selected + Prism 4 free switch	
	184-195		Fast →Slow,Prism 4 selected + Prism 1 free switch	
	196-207		Fast →Slow,Prism 4 selected + Prism 3 free switch	
	208-219		Fast →Slow,Prism 1 and prism 2 are interlocked and switched	
	220-231		Fast →Slow,Prism 1 and prism 4 are interlocked and switched	
	232-243		Fast →Slow,Prism 3 and prism 2 are interlocked and switched	
	244-255		Fast →Slow,Prism 3 and prism 4 are interlocked and switched	

Channel	DMX	Percentage	Function	Note
8	0-255	0-100	**Frost**	
9	0-255	0-100	**Focus**	
10	0-255	0-100	**Pan**	
11	0-255	0-100	**Pan Fine**	
12	0-255	0-100	**TILT**	
13	0-255	0-100	**TILT Fine**	
14	0-255	0-100	**bare**	
15			**Reset**	
	0-25		Unused Range	
	26-76		Effects Reset	
	77-127		PAN/TITL Reset	
	128-255		Complete Reset	
16			**Lamp Control**	
	0-25		Unused Range	
	26-100		Lamp OFF	
	101-255		Lamp ON	

14CH

Channel	DMX	Percentage	Function	Note
			Colour	
	0-4	0-1.56	White	
	5-8	1.96-3.14	White+Red	
	9-12	3.53-4.71	Red	
	13-17	5.10-6.67	Red+Orange	
	18-21	7.06-8.24	Orange	
	22-25	8.63-9.80	Orange+Aquamarine	
	26-29	10.2-11.4	Aquamarine	
	30-34	11.8-13.3	Aquamarine+Green	
	35-38	13.7-14.9	Green	
	39-42	15.3-16.5	Green+Light Green	
	43-46	16.9-18.0	Light Green	
	47-51	18.4-20.0	Light Green+Lavender	
	52-55	20.4-21.6	Lavender	
	56-59	22.0-23.1	Lavender+Pink	
	60-63	23.5-24.7	Pink	
1	64-68	25.1-26.7	Pink+Yellow	
	69-72	27.0-28.2	Yellow	
	73-76	28.6-29.8	Yellow+Magenta	
	77-81	30.2-31.8	Magenta	
	82-85	32.2-33.3	Magenta+Cyan	
	86-89	33.7-34.9	Cyan	
	90-93	35.3-36.5	Cyan+CTO 260	
	94-98	36.9-38.4	CTO 260	
	99-102	38.8-40.0	CTO 260+CTO 190	
	103-106	40.4-41.6	CTO 190	
	107-110	42.0-43.1	CTO 190+CTB 8000	
	111-115	43.5-45.1	CTB 8000	
	116-119	45.5-46.7	CTB 8000+Blue	
	120-123	47.1-48.2	Blue	
	124-127	48.6-49.8	Blue+White	
	128-191	50.2-74.9	CCW, Fast→Slow Rotation	
	192-255	75.3-100	CW, Slow→Fast Rotation	
			Strobe	
	0-3	0-1.2	Closed	
	4-103	1.6-40.4	Slow-Fast Strobe	
	104-107	40.8-42.0	Open	
2	108-157	42.4-61.6	slow →fast, fast off and slow on	
	158-207	62.0-81.2	Slow → fast, fast on and slow off	
	208-212	81.6-83.1	Open	
	213-251	83.5-98.4	Random Slow-Fast Strobe	
	252-255	99.8-100	Open	
3	0-255	0-100	**Dimmer**	
			Gobo	
	0-3	0-1.2	White	
	4-7	1.6-2.7	Gobo1	
	8-11	3.1-4.3	Gobo2	
	12-15	4.7-5.9	Gobo3	
	16-19	6.3-7.5	Gobo4	
	20-23	7.8-9.0	Gobo5	
	24-27	9.4-10.6	Gobo6	
	28-31	11.0-12.2	Gobo7	
	32-35	12.5-13.7	Gobo8	
	36-39	14.1-15.3	Gobo9	
	40-43	15.7-16.9	Gobo10	
	44-47	17.3-18.4	Gobo11	
	48-51	18.8-20.0	Gobo12	
	52-55	20.4-21.6	Gobo13	
	56-59	22.0-23.1	Gobo14	
	60-63	23.5-24.7	Gobo15	
	64-67	25.0-26.2	Gobo16	
	68-71	26.6-27.8	Gobo17	
4	72-78	28.2-31.7	Gobo1 Shake Slow-Fast Speed	
	79-86	32.1-36.0	Gobo2 Shake Slow-Fast Speed	
	87-93	36.4-40.3	Gobo3 Shake Slow-Fast Speed	

Channel	DMX	Percentage	Function	Note
	94-101	40.7-44.7	Gobo4 Shake Slow-Fast Speed	
	102-108	45.0-48.6	Gobo5 Shake Slow-Fast Speed	
	109-116	49.0-52.9	Gobo6 Shake Slow-Fast Speed	
	117-123	53.3-57.2	Gobo7 Shake Slow-Fast Speed	
	124-131	57.6-61.5	Gobo8 Shake Slow-Fast Speed	
	132-138	61.9-65.4	Gobo9 Shake Slow-Fast Speed	
	139-146	65.8-69.8	Gobo10 Shake Slow-Fast Speed	
	147-153	70.1-74.1	Gobo11 Shake Slow-Fast Speed	
	154-161	74.5-78.4	Gobo12 Shake Slow-Fast Speed	
	162-168	78.8-82.3	Gobo13 Shake Slow-Fast Speed	
	169-176	82.7-86.6	Gobo14 Shake Slow-Fast Speed	
	177-183	87.0-90.9	Gobo15 Shake Slow-Fast Speed	
	184-191	91.3-95.2	Gobo16 Shake Slow-Fast Speed	
	192-199	91.3-95.2	Gobo17 Shake Slow-Fast Speed	
	200-225		Fast-Slow Rotation(CW)	
	226-229		Stop	
	230-255		Slow-Fast Rotation(CCW)	
5			**Prism**	
	0-63	0-24.7	Unused Range	
	64-87		Prism1	
	88-111		Prism2	
	112-135		Prism3	
	136-159		Prism4	
	160-183		Prism1+Prism2	
	184-207		Prism1+Prism4	
	208-231		Prism2+Prism3	
	232-255		Prism3+Prism4	
6			**Prism Rotation**	
	0	0	Unused Range	
	1-63	0.4-24.7	Angle linear adjustment	
	Three kinds of prism effect options: set the prism (prism 1, prism 2 or prism 1+2) in the 5th channel			
	64-127	25.1-49.8	Prism rotates Fast →Slow,counterclockwise	
	128-191	50.2-74.9	Prism rotates Slow →Fast,clockwise rotation	
	192-207	75.3-81.2	Prism rotates Slow →Fast, 90° Rotate back and forth	
	208-223	81.6-87.5	Prism rotates Slow →Fast,180° Rotate back and forth	
	224-239	87.8-93.7	Prism rotates Slow →Fast,270° Rotate back and forth	
	240-255	94.1-100	Prism rotates Slow →Fast,360° Rotate back and forth	
7			**Prism Macro**	
	0-15	0-5.9	Unused Range	
	16-27		Fast →Slow, Prism1 Free switch	
	28-39		Fast →Slow,Prism2 Free switch	
	40-51		Fast →Slow,Prism3 Free switch	
	52-63		Fast →Slow,Prism4 Free switch	
	64-75		Fast →Slow,Prism1+ Prism2 Free switch	
	76-87		Fast →Slow,Prism1+ Prism4 Free switch	
	88-99		Fast →Slow,Prism2+ Prism3 Free switch	
	100-111		Fast →Slow,Prism3+ Prism4 Free switch	
	112-123		Fast →Slow,Prism 1 selected + Prism 2 free switch	
	124-135		Fast →Slow,Prism 1 selected + Prism 4 free switch	
	136-147		Fast →Slow,Prism 2 selected + Prism 1 free switch	
	148-159		Fast →Slow,Prism 2 selected + Prism 3 free switch	
	160-171		Fast →Slow,Prism 3 selected + Prism 2 free switch	
	172-183		Fast →Slow,Prism 3 selected + Prism 4 free switch	
	184-195		Fast →Slow,Prism 4 selected + Prism 1 free switch	
	196-207		Fast →Slow,Prism 4 selected + Prism 3 free switch	
	208-219		Fast →Slow,Prism 1 and prism 2 are interlocked and switched	
	220-231		Fast →Slow,Prism 1 and prism 4 are interlocked and switched	
	232-243		Fast →Slow,Prism 3 and prism 2 are interlocked and switched	
	244-255		Fast →Slow,Prism 3 and prism 4 are interlocked and switched	
8	0-255	0-100	**Frost**	
9	0-255	0-100	**Focus**	
10	0-255	0-100	**Pan**	

Channel	DMX	Percentage	Function	Note
11	0-255	0-100	**Pan Fine**	
12	0-255	0-100	**TILT**	
13	0-255	0-100	**TILT Fine**	
			Function	
	0-25	0-9.8	Unused Range	
	26-30	10.2-11.8	Effects Reset	
	31-35	12.2-13.7	PAN/TITL Reset	
14	36-40	14.4-15.7	Complete Reset	
	41-180	16.1-70.6	Unused Range	
	181-200	71.0-78.4	Lamp OFF	
	201-220	78.8-86.3	Unused Range	
	221-255	86.7-100	Lamp ON	

16CH PLUS

Channel	DMX	Percentage	Function	Note
			Colour	
	0-4	0-1.56	White	
	5-8	1.96-3.14	White+Red	
	9-12	3.53-4.71	Red	
	13-17	5.10-6.67	Red+Orange	
	18-21	7.06-8.24	Orange	
	22-25	8.63-9.80	Orange+Aquamarine	
	26-29	10.2-11.4	Aquamarine	
	30-34	11.8-13.3	Aquamarine+Green	
	35-38	13.7-14.9	Green	
	39-42	15.3-16.5	Green+Light Green	
	43-46	16.9-18.0	Light Green	
	47-51	18.4-20.0	Light Green+Lavender	
	52-55	20.4-21.6	Lavender	
	56-59	22.0-23.1	Lavender+Pink	
	60-63	23.5-24.7	Pink	
1	64-68	25.1-26.7	Pink+Yellow	
	69-72	27.0-28.2	Yellow	
	73-76	28.6-29.8	Yellow+Magenta	
	77-80	30.2-31.8	Magenta	
	81-85	32.2-33.3	Magenta+Cyan	
	86-89	33.7-34.9	Cyan	
	90-93	35.3-36.5	Cyan+CTO 260	
	94-98	36.9-38.4	CTO 260	
	99-102	38.8-40.0	CTO 260+CTO 190	
	103-106	40.4-41.6	CTO 190	
	107-110	42.0-43.1	CTO 190+CTB 8000	
	111-115	43.5-45.1	CTB 8000	
	116-119	45.5-46.7	CTB 8000+Blue	
	120-123	47.1-48.2	Blue	
	124-127	48.6-49.8	Blue+White	
	128-191	50.2-74.9	**CCW, Fast→Slow Rotation**	
	192-255	75.3-100	**CW, Slow→Fast Rotation**	
			Strobe	
	0-3	0-1.2	Closed	
	4-103	1.6-40.4	Slow-Fast Strobe	
	104-107	40.8-42.0	Open	
2	108-157	42.4-61.6	slow →fast, fast off and slow on	
	158-207	62.0-81.2	Slow → fast, fast on and slow off	
	208-212	81.6-83.1	Open	
	213-251	83.5-98.4	Random Slow-Fast Strobe	
	252-255	99.8-100	Open	
3	0-255	0-100	**Dimmer**	
			Gobo	
	0-3		White	
	4-7		Gobo1	
	8-11		Gobo2	
	12-15		Gobo3	
	16-19		Gobo4	
	20-23		Gobo5	
	24-27		Gobo6	
	28-31		Gobo7	
	32-35		Gobo8	
	36-39		Gobo9	
	40-43		Gobo10	
	44-47		Gobo11	
	48-51		Gobo12	
	52-55		Gobo13	
	56-59		Gobo14	
	60-63		Gobo15	
	64-67		Gobo16	
	68-71		Gobo17	
	72-78		Gobo1 Shake Slow-Fast Speed	
4	79-86		Gobo2 Shake Slow-Fast Speed	

Channel	DMX	Percentage	Function	Note
	87-93		Gobo3 Shake Slow-Fast Speed	
	94-101		Gobo4 Shake Slow-Fast Speed	
	102-108		Gobo5 Shake Slow-Fast Speed	
	109-116		Gobo6 Shake Slow-Fast Speed	
	117-123		Gobo7 Shake Slow-Fast Speed	
	124-131		Gobo8 Shake Slow-Fast Speed	
	132-138		Gobo9 Shake Slow-Fast Speed	
	139-146		Gobo10 Shake Slow-Fast Speed	
	147-153		Gobo11 Shake Slow-Fast Speed	
	154-161		Gobo12 Shake Slow-Fast Speed	
	162-168		Gobo13 Shake Slow-Fast Speed	
	169-176		Gobo14 Shake Slow-Fast Speed	
	177-183		Gobo15 Shake Slow-Fast Speed	
	184-191		Gobo16 Shake Slow-Fast Speed	
	192-199		Gobo17 Shake Slow-Fast Speed	
	200-225		Fast-Slow Rotation	
	226-229		Stop	
	230-255		Slow-Fast Rotation	
			Prism	
	0-63	0-24.7	Unused Range	
	64-87		Prism1	
	88-111		Prism2	
5	112-135		Prism3	
	136-159		Prism4	
	160-183		Prism1+Prism2	
	184-207		Prism1+Prism4	
	208-231		Prism2+Prism3	
	232-255		Prism3+Prism4	
			Prism Rotation	
	0	0	Unused Range	
	1-63	0.4-24.7	Angle linear adjustment	
	Three kinds of prism effect options: set the prism (prism 1, prism 2 or prism 1+2) in the 5th channel			
6	64-127	25.1-49.8	Prism rotates Fast →Slow,counterclockwise	
	128-191	50.2-74.9	Prism rotates Slow →Fast,clockwise rotation	
	192-207	75.3-81.2	Prism rotates Slow →Fast, 90° Rotate back and forth	
	208-223	81.6-87.5	Prism rotates Slow →Fast,180° Rotate back and forth	
	224-239	87.8-93.7	Prism rotates Slow →Fast,270° Rotate back and forth	
	240-255	94.1-100	Prism rotates Slow →Fast,360° Rotate back and forth	
			Prism Macro	
	0-15	0-5.9	Unused Range	
	16-27		Fast →Slow, Prism1 Free switch	
	28-39		Fast →Slow,Prism2 Free switch	
	40-51		Fast →Slow,Prism3 Free switch	
	52-63		Fast →Slow,Prism4 Free switch	
	64-75		Fast →Slow,Prism1+ Prism2 Free switch	
	76-87		Fast →Slow,Prism1+ Prism4 Free switch	
	88-99		Fast →Slow,Prism2+ Prism3 Free switch	
	100-111		Fast →Slow,Prism3+ Prism4 Free switch	
	112-123		Fast →Slow,Prism 1 selected + Prism 2 free switch	
7	124-135		Fast →Slow,Prism 1 selected + Prism 4 free switch	
	136-147		Fast →Slow,Prism 2 selected + Prism 1 free switch	
	148-159		Fast →Slow,Prism 2 selected + Prism 3 free switch	
	160-171		Fast →Slow,Prism 3 selected + Prism 2 free switch	
	172-183		Fast →Slow,Prism 3 selected + Prism 4 free switch	
	184-195		Fast →Slow,Prism 4 selected + Prism 1 free switch	
	196-207		Fast →Slow,Prism 4 selected + Prism 3 free switch	
	208-219		Fast →Slow,Prism 1 and prism 2 are interlocked and switched	
	220-231		Fast →Slow,Prism 1 and prism 4 are interlocked and switched	
	232-243		Fast →Slow,Prism 3 and prism 2 are interlocked and switched	
	244-255		Fast →Slow,Prism 3 and prism 4 are interlocked and switched	

Channel	DMX	Percentage	Function	Note
8	0-255	0-100	**Frost**	
9	0-255	0-100	**Focus**	
10	0-255	0-100	**Pan**	
11	0-255	0-100	**Pan Fine**	
12	0-255	0-100	**TILT**	
13	0-255	0-100	**TILT Fine**	
14	0-255	0-100	**bare**	
15			**Reset**	
	0-25		Unused Range	
	26-76		Effects Reset	
	77-127		PAN/TITL Reset	
	128-255		Complete Reset	
16			**Lamp Control**	
	0-25		Unused Range	
	26-100		Lamp OFF	
	101-255		Lamp ON	

6.Electrical Connection Diagram

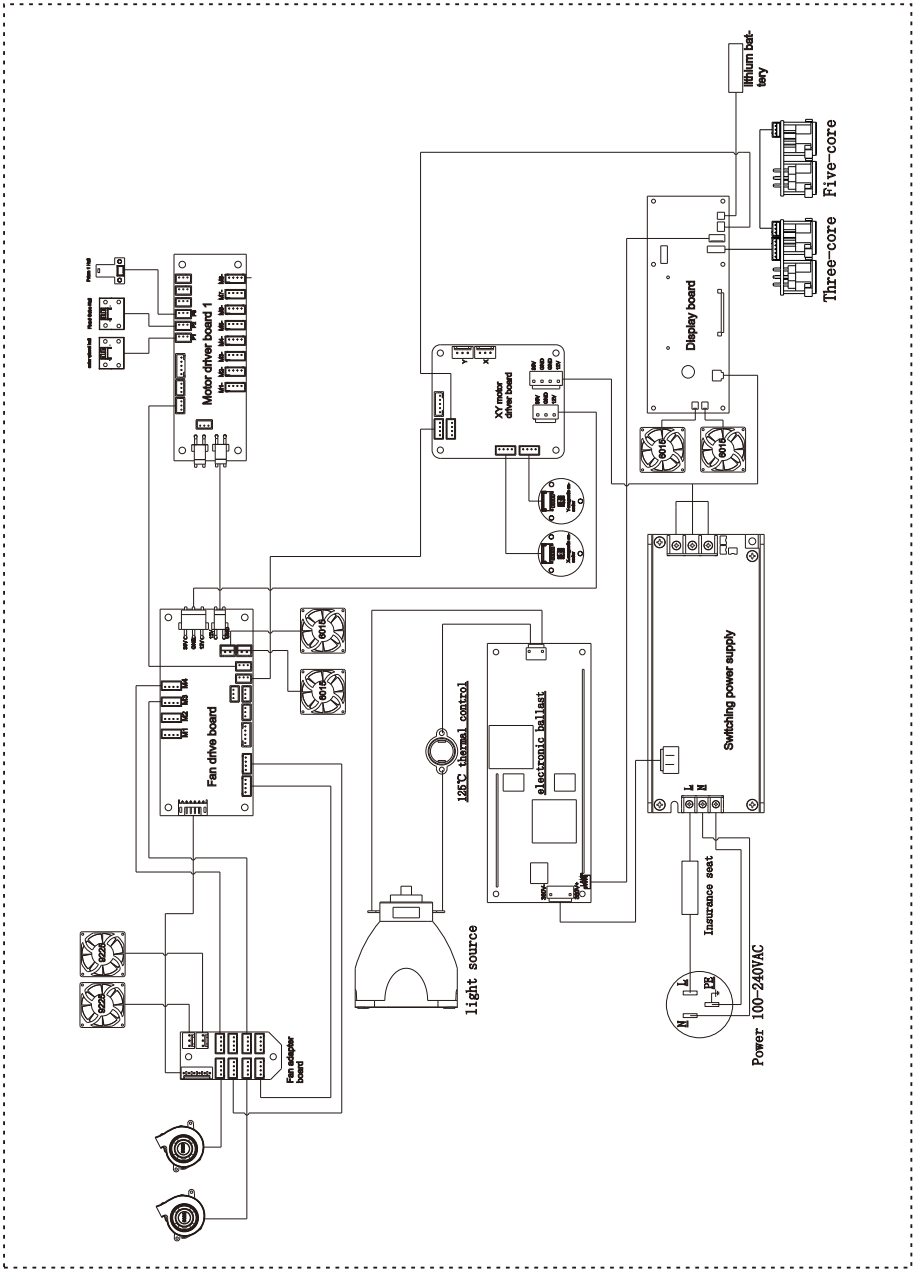

The position of each fan of the fixture:

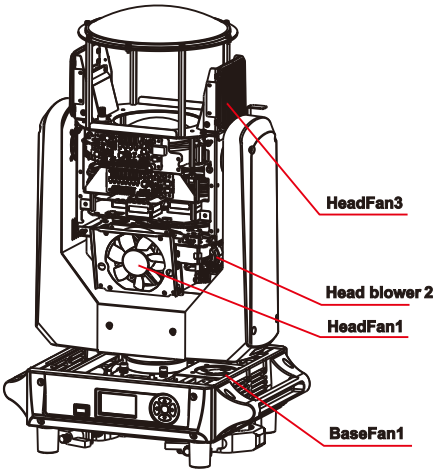

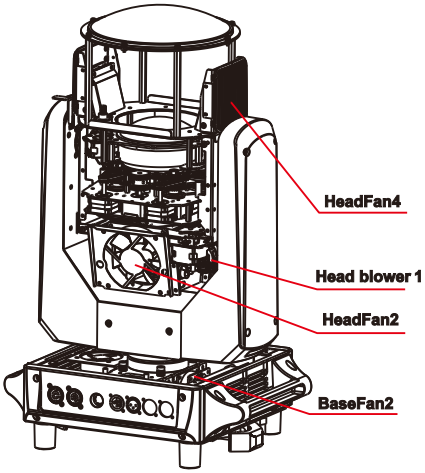

7.Troubleshooting

PAN ERROR:

- Check whether there are other items interfering with the operation and reset of the X axis within the operation range.
- Check whether the connecting wire of the X-axis magnetic encoder is in bad contact or disconnected.
- Check whether the connecting wire of the X-axis motor is in bad contact or disconnected.
- Check whether the X-axis magnetic sensing plate is loose, detached or damaged.
- Check whether the relevant circuit of the X-axis motor driver board is damaged.
- Check whether the X-axis motor is damaged.
- Check the display board itself for damage.

PAN ERROR:

- Check whether there are other items interfering with the operation and reset of the X axis within the operation range.
- Check whether the connecting wire of the X-axis magnetic encoder is in bad contact or disconnected.
- Check whether the connecting wire of the X-axis motor is in bad contact or disconnected.
- Check whether the X-axis magnetic sensing plate is loose, detached or damaged.
- Check whether the relevant circuit of the X-axis motor driver board is damaged.
- Check whether the X-axis motor is damaged.
- Check the display board itself for damage.

TILT ERROR:

- Check whether there are other items within the operation range of the Y-axis to interfere with its operation and reset.
- Check whether the connection line of the Y-axis magnetic sensing plate is in bad contact or disconnected.
- Check whether the connecting wire of the Y-axis motor is in bad contact or disconnected.
- Check whether the Y axis magnetic sensing plate is loose, shed or damaged.
- Check whether the relevant circuit of Y-axis motor driver board is damaged.
- Check whether the Y-axis motor is damaged.
- Check the display board itself for damage.

FIXGOBO ERROR:

- Check whether there are other items within the operation range of fixed pattern plate to interfere with its operation and reset.
- Check whether the connection line of the magnetic sensing plate of the fixed pattern plate is in bad contact or disconnected.
- Check whether the connection wire of the fixed pattern plate motor is in bad contact or disconnected.
- Check whether the fixed pattern plate magnet is loose, falling off or damaged.
- Check whether the magnetic sensing plate of the fixed pattern plate is loose, shed or damaged.
- Check whether the relevant circuit of the motor driver plate of the fixed pattern plate is damaged.
- Check whether the fixed pattern plate motor is damaged.
- Check the display board itself for damage.

COLOUR ERROR:

- Check whether there are other items within the operating range of the color disk to interfere with its operation and reset.
- Check whether the connecting wire of the magnetic sensing plate of the color disk is in bad contact or disconnected.
- Check whether the connecting wire of the color plate motor is in bad contact or disconnected.
- Check whether the color disk magnet is loose, detached or damaged.
- Check whether the magnetic sensing plate of the color plate is loose, shed or damaged.
- Check whether the circuit related to the color disk motor drive board is damaged.
- Check whether the color plate motor is damaged.
- Check the display board itself for damage.

PRISM ERROR:

- Check whether there are other items interfering with the operation and reset of the prism within the scope of its rotation.
- Check whether the apron on the rotating belt wheel of the prism is loose, shed or damaged.
- Check whether the prism rotation magnetic sensing plate is loose, falling off or damaged.
- Check whether the relevant circuit of the drive board of the prism revolution motor is damaged.
- Check whether the prism revolution motor is damaged.
- Check the display board itself for damage.

PRISM 1 ERROR:

- Check whether there are other items in the operation range of prism 1 to interfere with its operation and reset.
- Check whether the running motor wire of prism 1 is loose or falling off.
- Check whether the relevant circuit of prism 1 motor drive board is damaged.
- Check whether the prism 1 motor is damaged.
- Check the display board itself for damage.

PRISM 2 ERROR:

- Check whether there are other items in the operation range of prism 2 to interfere with its operation and reset.
- Check whether the running motor wire of prism 2 is loose or falling off.
- Check whether the relevant circuit of prism 2 motor drive board is damaged.
- Check whether the prism 2 motor is damaged.
- Check the display board itself for damage.

PRISMROT ERROR:

- Check whether the prism rotating motor wire is loose or falling off.
- Check whether the relevant circuit of the rotating drive plate of the prism is damaged.
- Check whether the prism rotating motor is damaged.
- Check the display board itself for damage.

FROST ERROR:

- Check whether the atomizing motor wire is loose or falling off.
- Check whether the atomization driver board related circuit is damaged.
- Check whether the atomizing rotating motor is damaged.
- Check the display board itself for damage.

DIMMER ERROR:

- Check whether the dimming 1 motor wire is loose or falling off.
- Check whether the related circuit of dimming 1 driver board is damaged.
- Check whether the dimming 1 rotating motor is damaged.
- Check the display board itself for damage.

DIMMER 2 ERROR:

- Check whether the dimming 2 motor wire is loose or falling off.
- Check whether the related circuit of dimming 2 driver board is damaged.
- Check whether the dimming 2 rotating motor is damaged.
- Check the display board itself for damage.

LAMP FAN1 ERROR:

- Check whether the related wires of blower 1 are loose or fall off.
- Check whether the relevant circuit of blower 1 drive board is damaged.
- Check whether blower 1 itself is damaged.
- Check the display board itself for damage.

LAMP FAN2 ERROR:

- Check whether the related wires of blower 2 are loose or fall off.
- Check whether the related circuit of blower 2 drive board is damaged.
- Check whether blower 2 itself is damaged.
- Check the display board itself for damage.

IN FAN ERROR:

- Check whether the inlet fan related wires are loose or fall off.
- Check whether the relevant circuit of the drive plate of the intake fan is damaged.
- Check whether the intake fan itself is damaged.
- Check the display board itself for damage.

OUT FAN ERROR:

- Check whether the wire related to the outlet fan is loose or falling off.
- Check whether the relevant circuit of the drive plate of the outlet fan is damaged.
- Check whether the outlet fan itself is damaged.
- Check the display board itself for damage.

PVG ERROR :

For other reasons, please contact the manufacturer after sale.

PVG UART ERROR:

- Check whether the ballast communication wire is loose or falling off.
- Check whether the ballast itself is damaged.
- Check the display board itself for damage.

PVG TEMP HIGHT:

- Check whether the ballast cooling fan is running normally.
- Check whether the ballast itself is damaged.
- Check the display board itself for damage.

PVG LOW VOLTAGE:

- Check whether the ballast input voltage is normal.
- Check whether the ballast itself is damaged.
- Check the display board itself for damage.

8.Fixture Cleaning

It is absolutely essential that the fixture is kept clean to ensure the maximum light-output and allow the fixture to function reliably throughout its life. The fixture must be cleaned regularly to avoid dust, dirt and smoke-fluid residues building up on or within the fixture. The cleaning frequency depends on the application environment. Clean the fixture immediately if the dust enters it to avoid damage to the optical lens due to excessive dust.

* A soft lint-free cloth moistened with any good glass cleaning fluid is recommended, under no circumstances should solvents be used.
* Always dry the parts carefully.
* Clean the external optical lens at least every 20 days and the internal optical lens every 30 days.

CAUTION！！！

Disconnect from mains before starting maintenance operation.

9.Duty exonerative and copyright protectio

* Light source belongs to consumption products, not within the scope of warranty.
* The manufacturer shall not bear any responsibility for any damage caused by failure to operate in accordance with this instruction.
* All the information in this manual shall be interpreted by the manufacturer.
* All the information in this manual shall not be copied without permission.
* The data contained in this statement are subject to change in the future without prior notice.