LiGHT SKY

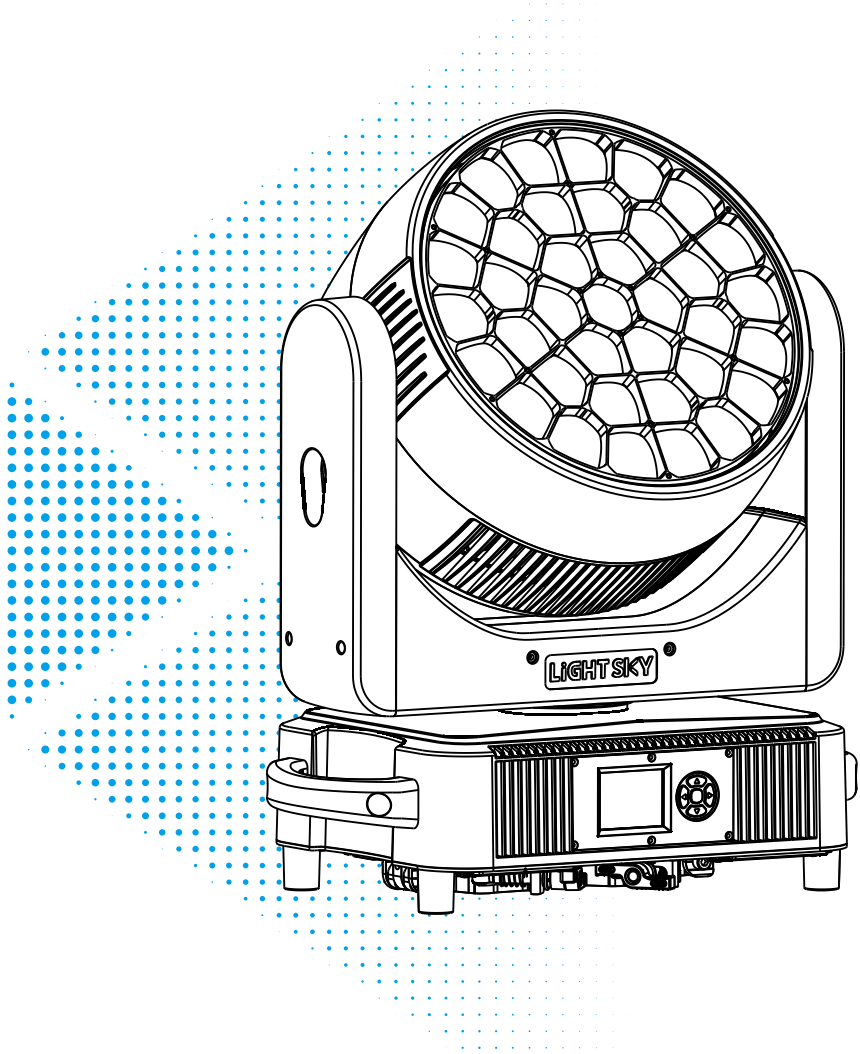

PEARL WASH MAX

User Manual

Please read the instruction carefully before use

4.3.DMX 512 Configuration

26CH	44CH	56CH	39CH	DMX	FUNCTION	Note
1	1	1	18	0-255	Pan	Angle：0-540°，Maximal Speed：2.48S
2	2	2	19	0-255	Pan Fine	
3	3	3	20	0-255	Tilt	Angle：0-215°，Maximal Speed：1.35S
4	4	4	21	0-255	Tilt Fine	
5	5	5	22		Special functions	
				0-25	No Function	
				26-30	Zoom Reset(Useless in 39 channel mode)	
				31-40	P/T Reset(Useless in 39 channel mode)	
				41-50	Fixture Reset(Useless in 39 channel mode)	
				51-55	Fan mode: Standard	
				56-60	Fan mode: High Output	
				61-65	Fan mode: Silent	
				66-70	No Function	
				71-75	Zoom invert on	
				76-80	Zoom invert off	
				81-85	Display on	
				86-90	Display off	
				91-95	Pan invert on	
				96-100	Pan invert off	
				101-105	Tilt invert on	
				106-110	Tilt invert off	
				111-115	Dimmer frequence:1800HZ	
				116-120	Dimmer frequence:3600HZ	
				121-125	Dimmer frequence:7200HZ	
				126-130	Dimmer frequence:25000HZ	
				131-135	Dimmer curve: Linear	
				136-140	Dimmer curve: Square	
				141-145	Dimmer curve: Inv-square	
				146-150	Dimmer curve: S-Curve	
				151-155	Dimmer speed:Normal	
				156-160	Dimmer speed:Smooth 1	
				161-165	Dimmer speed:Smooth 2	
				166-170	Dimmer speed:Smooth 3	
				171-175	XY Normal mode	
				176-180	XY Fast mode	
				181-185	XY Precise mode	
				186-190	Zoom Normal mode	
				191-195	Zoom Fast mode	
				196-200	Zoom Precise mode	
				201-255	No Function	
/	/	/	23		Reset	It's only available under channel 39
				0-25	No Function	
				26-70	Zoom Reset	
				71-127	P/T Reset	
				128-255	Fixture Reset	
6	6	6	24	0-255	Zoom	
7	7	7	25	0-255	Zoom Fine	
8	8	8	16	0-255	Dimmer from 0% to 100% (0=default)	
9	9	9	17	0-255	Dimmer Fine from 0% to 100% (0=default)	
10	10	10	15		Shutter	
				0-9	No Function	
				10-49	Slow closing，Fast opening，slow → fast	1→25 HZ
				50-89	Fast closing，Slow opening，Slow → Fast	1→25 HZ
				90-119	Slow closing，Slow open，Slow → Fast	1→25 HZ
				120-179	Random strobe,Slow → Fast	1→25 HZ
				180-249	Synchronous strobe,slow → fast	1→25 HZ
				250-255	Shutter open	
					Macro	
				0-4	No Function	
				5-19	CCT	
					Foreign Color	
				20-21	Filter 4 (Medium Bastard Amber)	
				22-23	Filter 19 (Fire)	

26CH	44CH	56CH	39CH	DMX	FUNCTION	Note
				24-25	Filter 58 (Lavender)	
				26-27	Filter 68 (Sky Blue)	
				28-29	Filter 71 (Tokyo Blue)	
				30-31	Filter 79 (Just Blue)	
				32-33	Filter 90 (Dark Yellow Green)	
				34-35	Filter 103 (Straw)	
				36-37	Filter 111 (Dark Pink)	
				38-39	Filter 115 (Peacock Blue)	
				40-41	Filter 116 (Medium Blue-Green)	
				42-43	Filter 117 (Steel Blue)	
				44-45	Filter 118 (Light Blue)	
				46-47	Filter 119 (Dark Blue)	
				48-49	Filter 128 (Bright Pink)	
				50-51	Filter 131 (Marine Blue)	
				52-53	Filter 132 (Medium Blue)	
				54-55	Filter 137 (Special Lavender)	
				56-57	Filter 138 (Pale Green)	
				58-59	Filter 139 (Primary Green)	
				60-61	Filter 141 (Bright Blue)	
				62-63	Filter 148 (Bright Rose)	
				64-65	Filter 152 (Pale Gold)	
				66-67	Filter 154 (Pale Rose)	
				68-69	Filter 157 (Pink)	
				70-71	Filter 162 (Bastard Amber)	
				72-73	Filter 165 (Daylight Blue)	
				74-75	Filter 169 (Lilac Tint)	
				76-77	Filter 170 (Deep Lavender)	
				78-79	Filter 172 (Lagoon Blue)	
				80-81	Filter 180 (Dark Lavender)	
				82-83	Filter 181 (Congo Blue)	
				84-85	Filter 197 (Alice Blue)	
				86-87	Filter 201 (Full C.T. Blue)	
11	11	11	14	88-89	Filter 202 (Half C.T. Blue)	
				90-91	Filter 203 (Quarter C.T. Blue)	
				92-93	Filter 205 (Half C.T. Orange)	
				94-95	Filter 206 (Quarter C.T. Orange)	
				96-97	Filter 247 (Filter Minus Green)	
				98-99	Filter 248 (Half Minus Green)	
				100-101	Filter 281 (Three Quarter C.T. Blue)	
				102-103	Filter 285 (Three Quarter C.T. Orange)	
				104-105	Filter 352 (Glacier Blue)	
				106-107	Filter 353 (Lighter Blue)	
				108-109	Filter 715 (Cabana Blue)	
				110-111	Filter 793 (Vanity Fair)	
					Local Color	
				112-113	120 Begonia Red	
				114-115	212 Light Wheat Yellow	
				116-117	308 Light Yellow	
				118-119	311 Moon White	
				120-121	410 Pale Cyan	
				122-123	508 Grass Green	
				124-125	517 Cold Blue	
				126-127	608 Light Green	
				128-129	715 Cyan Cloud	
				130-131	803 Dark lavender	
				132-133	808 Dusk Purple	
				134-135	812 Light Wind Chime	
				136-137	909 Plum Sauce Purple	
				138-139	916 Kao Mauve	
				140-141	1013 Wild Rose Pink	
				142-143	1022 Sakura Pink	
				144-192	Reserved	
					Color Effect	

26CH	44CH	56CH	39CH	DMX	FUNCTION	Note
				193-202	Color wheel change speed from fast to slow	
				203-212	Color wheel change speed from fast to slow	
				213-222	Color wheel change speed from fast to slow	
				223-232	Color wheel change speed from fast to slow	
				233-242	Rainbow color speed from slow to fast	
				243-252	Rainbow color speed from slow to fast	
				253-255	Rainbow color speed from slow to fast	
12	12	12	13		CCT	
				0-2	No Function	
				3-255	CCT color 10000K-2500K	
				3	10000K	
				23	9500K	
				43	9000K	
				63	8500K	
				83	8000K	
				103	7500K	
				120	7000K	
				135	6500K	
				150	6000K	
				162	5600K	
				180	5000K	
				195	4500K	
				210	4000K	
				219	3700K	
				225	3500K	
				234	3200K	
				240	3000K	
				249	2700K	
				255	2500K	
13	13	13	/		CRI selection	
				0-255	CRI selection from Standard(CRI90+/R9:95+) to High light (CRI90+/R9:80) (0=default)	
14	14	14	/		Green correction	
				0	Uncorrected white	
				1-127	Minus green --> uncorrected white	
				128	Uncorrected white (128=default)	
				129-254	Uncorrected white --> Plus green	
				255	Uncorrected white	
15	15	15	/		Static LED Effect	
				0-7	No Function	
				8-149	Static Scene1-71 (2 dmx for every scene)	71 scenes
				150-255	No Function	
16	16	16	/		Move LED Effect	
				0-7	No Function	
				8-111	Dynamic scene 1-51(2 dmx for every scene)	51 scenes
				112-127	Random scene	
				128-255	No Function	
17	17	17	/		Move LED Effect Speed	
				0-126	Forwards move led effect speed from fast to slow	
				127-128	Stop	
				129-255	Backwards move led effect speed from slow to fast	
18	18	18	/		Move LED Effect Delay	
				0-255	Move LED effect delay from fast to slow	
19	19	19	/		Background Color	
				0-1	No Function	
				2-255	Color for background	
20	20	20	/		Background Dimmer	
				0-255	Background dimmer from 0% to 100% (0=default)	
21	/	/	1	0-255	Red (0%-100%)	
/	/	/	2	0-255	Red Fine (0%-100%)	
22	/	/	3	0-255	Green (0%-100%)	
/	/	/	4	0-255	Green Fine(0%-100%)	
23	/	/	5	0-255	Blue (0%-100%)	

26CH	44CH	56CH	39CH	DMX	FUNCTION	Note
/	/	/	6	0-255	Blue Fine (0%-100%)	
24	/	/	7	0-255	White (0%-100%)	
/	/	/	8	0-255	White Fine (0%-100%)	
25	/	/	9	0-255	Amber (0%-100%)	
/	/	/	10	0-255	Amber Fine (0%-100%)	
26	/	/	11	0-255	Light Green (0%-100%)	
/	/	/	12	0-255	Light Green Fine (0%-100%)	
/	21	/	/	0-255	Ring Red1 (0%-100%)	
/	22	/	/	0-255	Ring Green1 (0%-100%)	
/	23	/	/	0-255	Ring Blue1 (0%-100%)	
/	24	/	/	0-255	Ring White1 (0%-100%)	
/	25	/	/	0-255	Ring Amber1 (0%-100%)	
/	26	/	/	0-255	Ring Light Green1 (0%-100%)	
/	27	/	/	0-255	Ring Red2 (0%-100%)	
/	28	/	/	0-255	Ring Green2 (0%-100%)	
/	29	/	/	0-255	Ring Blue2 (0%-100%)	
/	30	/	/	0-255	Ring White2 (0%-100%)	
/	31	/	/	0-255	Ring Amber2 (0%-100%)	
/	32	/	/	0-255	Ring Light Green2 (0%-100%)	
/	33	/	/	0-255	Ring Red3 (0%-100%)	
/	34	/	/	0-255	Ring Green3 (0%-100%)	
/	35	/	/	0-255	Ring Blue3 (0%-100%)	
/	36	/	/	0-255	Ring White3 (0%-100%)	
/	37	/	/	0-255	Ring Amber3 (0%-100%)	
/	38	/	/	0-255	Ring Light Green3 (0%-100%)	
/	39	/	/	0-255	Ring Red4 (0%-100%)	
/	40	/	/	0-255	Ring Green4 (0%-100%)	
/	41	/	/	0-255	Ring Blue4 (0%-100%)	
/	42	/	/	0-255	Ring White4 (0%-100%)	
/	43	/	/	0-255	Ring Amber4 (0%-100%)	
/	44	/	/	0-255	Ring Light Green4 (0%-100%)	
/	/	21	/	0-255	Red1 (0%-100%)	
/	/	22	/	0-255	Green1 (0%-100%)	
/	/	23	/	0-255	Blue1 (0%-100%)	
/	/	24	/	0-255	White1 (0%-100%)	
/	/	25	/	0-255	Amber1 (0%-100%)	
/	/	26	/	0-255	Light Green1 (0%-100%)	
/	/	27	/	0-255	Red2 (0%-100%)	
/	/	28	/	0-255	Green2 (0%-100%)	
/	/	29	/	0-255	Blue2 (0%-100%)	
/	/	30	/	0-255	White2 (0%-100%)	
/	/	31	/	0-255	Amber2 (0%-100%)	
/	/	32	/	0-255	Light Green2 (0%-100%)	
/	/	33	/	0-255	Red3 (0%-100%)	
/	/	34	/	0-255	Green3 (0%-100%)	
/	/	35	/	0-255	Blue3 (0%-100%)	
/	/	36	/	0-255	White3 (0%-100%)	
/	/	37	/	0-255	Amber3 (0%-100%)	
/	/	38	/	0-255	Light Green3 (0%-100%)	
/	/	39	/	0-255	Red4 (0%-100%)	
/	/	40	/	0-255	Green4 (0%-100%)	
/	/	41	/	0-255	Blue4 (0%-100%)	
/	/	42	/	0-255	White4 (0%-100%)	
/	/	43	/	0-255	Amber4 (0%-100%)	
/	/	44	/	0-255	Light Green4 (0%-100%)	
/	/	45	/	0-255	Red5 (0%-100%)	
/	/	46	/	0-255	Green5 (0%-100%)	
/	/	47	/	0-255	Blue5 (0%-100%)	
/	/	48	/	0-255	White5 (0%-100%)	
/	/	49	/	0-255	Amber5 (0%-100%)	
/	/	50	/	0-255	Light Green5 (0%-100%)	
/	/	51	/	0-255	Red6 (0%-100%)	
/	/	52	/	0-255	Green6 (0%-100%)	

26CH	44CH	56CH	39CH	DMX	FUNCTION	Note
/	/	53	/	0-255	Blue6 (0%-100%)	
/	/	54	/	0-255	White6 (0%-100%)	
/	/	55	/	0-255	Amber6 (0%-100%)	
/	/	56	/	0-255	Light Green6 (0%-100%)	
/	/	/	26	0-255	Shape Selection	Channel compatibility, currently without functionality
/	/	/	27	0-255	Shape Speed	
/	/	/	28	0-255	Shape Fade	
/	/	/	29	0-255	Shape R	
/	/	/	30	0-255	Shape G	
/	/	/	31	0-255	Shape B	
/	/	/	32	0-255	Shape W	
/	/	/	33	0-255	Shape Dimmer	
/	/	/	34	0-255	Background Dimmer	
/	/	/	35	0-255	Shape Transition	
/	/	/	36	0-255	Shape Offset	
/	/	/	37	0-255	Foreground Strobe	
/	/	/	38	0-255	Background Strobe	
/	/	/	39	0-255	Background Select	