LiGHT SKY



NEW

PEARL WASH MAX

LED MOVING BEAM WASH

FEATURES

- PEARL WASH MAX is a multi-functional moving head fixture combining wash and beam effects.
- It features 37 × 60W RGBWLA LEDs and a uniquely designed optical lens with scratch-resistant, anti-static, and high-transmittance properties, ensuring stable and consistent light output.
- With an ultra-wide zoom range of 5°–65°, the fixture offers excellent flexibility.
- It also includes multiple color macros and dynamic effect macros.
- PEARL WASH MAX is suitable for stage performances, TV productions, music festivals, and rental events, delivering versatile performance for wash lighting, color mixing, and beam effects.

Unit: mm

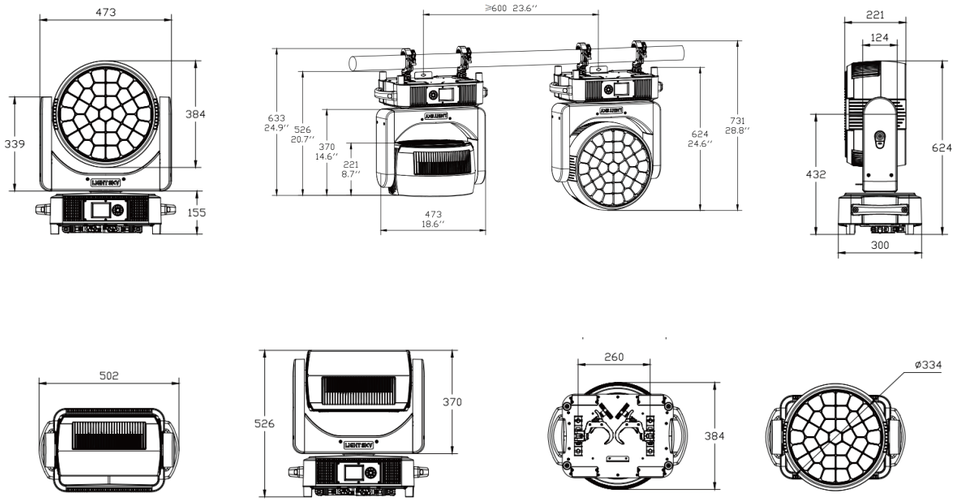

Optics

- Light Source: 37×60W RGBWLA LED
- Beam Angle: 5°~42°
- Field Angle: 7.8°~65°
- Colour Temperature Output: 2500K - 10000K
- Color Rendering Index (CRI): Ra ≥ 95
- Illuminance : 53, 500 lx@ 5m
- Lumen Output: 20, 000 lm
- Light Source Theory Life Span: 30, 000 h
- LiGHTSKY Colorfy Calibration

Effects

- Color Mixing System: Uniform RGBWLA color mixing system and rainbow effect
- Zoom System: Linear electronic zoom
- Ring Control: Light source supports ring control with dynamic ring effects
- Effect Macros: Includes static and dynamic effect macro functions
- Dimming: Electronic dimming with four dimming curves, four dimming frequencies, and four dimming speeds
- Strobe: 1-25Hz electronic strobe and random strobe effects

Control and Programming

- Control channels: 26CH, 44CH, 56CH, 39CH(see channel chart for details)
- Protocols: DMX512, RDM, Art-Net, sACN
- Control Protocols: 3 pin or 5 pin XLR IN/OUT, RJ45 IN/OUT
- Display: LCD screen

Software

- Software Upgrade: Via DMX/USB interface
- Temperature Intelligent Control: Ensures LED longevity

Pan/Tilt Movement

- Pan: 540°, 8-bit / 16-bit precision
- Tilt: 215° , 8-bit / 16-bit precision
- Automatic reset with error correction
- Pan/Tilt Lock

Power and Electrical

- Input Voltage Range: AC 100-240V 50/60Hz
- Max Power Consumption: 1500W
- Power Factor: 0.977
- Maximum Current of Fixture: 6.63/220V,15A/100V

Size and Weight

- Product Dimensions: 502mm × 384mm × 624mm
- Net Weight: 28.6kg
- Carton Dimensions: 620mm × 470mm × 655mm
- Gross Weight: 35.7kg

Other

- IP Rate: IP20
- Operating Environment: -10℃ ~ 45℃
- Maximum Surface Temperature of Fixture: 55℃

Factory Configuration

- Power Cable: 1 pc (Part No.: C1400050050)
- Signal Cable: 1 pc (Part No.: C1400060031)
- Safety Rope: 2 pcs (Part No.: F0200010010)
- Clamp: 2 pcs Compatible with tubes of Ø50-60 mm(Part No.: C0499990061)

Optional Accessories/Packaging

- Flycase Part No.: B0101160001
- Flycase Dimensions(2 in 1): 970mm × 660mm × 815mm
- Flycase Gross Weight(2 in 1): 99.8kg

Illumination Diagram

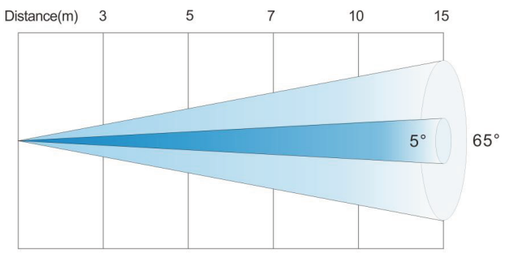

5° Lux R	22361	8050	4107	2013	894
G	40556	14600	7449	3650	1622
B	9167	3300	1684	825	367
W	37500	13500	6888	3375	1500
L	126944	45700	23316	11425	5078
A	31667	11400	5816	2850	1267
RGBWLA	148611	53500	27296	13375	5944
Diameter(m)	0.29	0. 48	0. 67	0. 96	1.44
65° Lux R	733	264	135	66	29
G	1497	539	272	135	60
B	361	130	66	33	14
W	1358	489	249	122	54
L	4728	1702	868	426	189
A	1158	417	213	104	46
RGBWLA	5389	1940	990	485	216
Diameter(m)	2.29	3.82	5.35	7.64	11.46

